This is a digital copy of a book that was preserved for generations on library shelves before it was carefully scanned by Google as part of a project to make the world's books discoverable online.

It has survived long enough for the copyright to expire and the book to enter the public domain. A public domain book is one that was never subject to copyright or whose legal copyright term has expired. Whether a book is in the public domain may vary country to country. Public domain books are our gateways to the past, representing a wealth of history, culture and knowledge that's often difficult to discover.

Marks, notations and other marginalia present in the original volume will appear in this file - a reminder of this book's long journey from the publisher to a library and finally to you.

Usage guidelines

Google is proud to partner with libraries to digitize public domain materials and make them widely accessible. Public domain books belong to the public and we are merely their custodians. Nevertheless, this work is expensive, so in order to keep providing this resource, we have taken steps to prevent abuse by commercial parties, including placing technical restrictions on automated querying.

We also ask that you:

+ *Make non-commercial use of the files* We designed Google Book Search for use by individuals, and we request that you use these files for personal, non-commercial purposes.

+ *Refrain from automated querying* Do not send automated queries of any sort to Google's system: If you are conducting research on machine translation, optical character recognition or other areas where access to a large amount of text is helpful, please contact us. We encourage the use of public domain materials for these purposes and may be able to help.

+ *Maintain attribution* The Google "watermark" you see on each file is essential for informing people about this project and helping them find additional materials through Google Book Search. Please do not remove it.

+ *Keep it legal* Whatever your use, remember that you are responsible for ensuring that what you are doing is legal. Do not assume that just because we believe a book is in the public domain for users in the United States, that the work is also in the public domain for users in other countries. Whether a book is still in copyright varies from country to country, and we can't offer guidance on whether any specific use of any specific book is allowed. Please do not assume that a book's appearance in Google Book Search means it can be used in any manner anywhere in the world. Copyright infringement liability can be quite severe.

About Google Book Search

Google's mission is to organize the world's information and to make it universally accessible and useful. Google Book Search helps readers discover the world's books while helping authors and publishers reach new audiences. You can search through the full text of this book on the web at `http://books.google.com/`

The Phosphor Bronze Co.

LIMITED,

87 SUMNER St., SOUTHWARK, LONDON, S.E.

Sole Makers of the Original

"COG WHEEL" and "VULCAN" Brands of

"PHOSPHOR BRONZE"

The best and most durable Alloys for Slide Valves. Bearings, Bushes, and other parts of Machinery exposed to friction and wear, Pump Rods, Pumps, Piston Rings, Pinions, Worm Wheels, Motor Gearing, etc.

"

Library

of the

University of Wisconsin

(REGISTERED TRADE MARK)

Alloy B, specially adapted for BEARINGS FOR HOT NECK ROLLS OF IRONWORKS, TIN PLATE MILLS, etc.

ROLLED AND DRAWN BRONZE, GUN METAL AND TIN.

BABBITT METAL, *"Vulcan" Brand.*

PLASTIC METAL, *"Cog Wheel" Brand.*

"WHITE ANT" METAL,

Cheaper than any Babbitt's and equal to best Magnolia Metal.

Phosphor Tin and Phosphor Copper, "Cog Wheel" Brand.

Please specify the manufacture of the Phosphor Bronze Co., Ltd., Southwark London, S.E., to prevent imposition.

The Phosphor Bronze Co.

LIMITED,

Sole Makers of the following Alloys:

PHOSPHOR BRONZE.

"Cog Wheel" and Vulcan Brands. Ingots, Castings, Plates, Strip, Bars and Wire.

"DURO METAL" (*Registered Title*). **A BRONZE ALLOY**

for Roll Bearings, Wagon Brasses, etc.

PHOSPHOR TIN AND PHOSPHOR COPPER.

"Cog Wheel" Brand. The best qualities made.

PLASTIC METAL.

"Cog Wheel" Brand. The best filling and lining Metal in the market.

BABBITT'S METAL.

"Vulcan" Brand. 7 Grades from £45 per ton.

PHOSPHOR WHITE LINING METAL.

Fully equal to Best White Brass No. 2, for lining Marine Engine Bearings, etc.

"WHITE ANT" METAL, No. I.

Cheaper than any Babbitt's and equal to best Magnolia Metal.

"WHITE ANT" BRONZE (A WHITE METAL).

Superior to Fenton's Metal for Car Bearings, etc.

BRONZE ELECTRICAL WIRE & STRIP.

---

87 SUMNER ST., SOUTHWARK

LONDON, S.E.

Telegraphic Address:
"Phosphor Bronze, London."

Telephone No.:
557, Hop.

WATER

OR

HYDRAULIC MOTORS

WATER

OR

HYDRAULIC MOTORS

BY

PHILIP R. BJÖRLING

AUTHOR OF 'PRACTICAL HANDBOOK ON PUMP CONSTRUCTION,' ETC. ETC.

WITH 208 ILLUSTRATIONS

NEW IMPRESSION

London

E. & F. N. SPON, LTD., 125 STRAND

New York

SPON & CHAMBERLAIN, 123 LIBERTY STREET

1903

6499695

108561
JUL 23 1907

CYH
B55

PREFACE

It might appear presumptuous of me to attempt a work on water-motors, as such eminent men as Lord Armstrong, Sir William Fairbairn, Professor Robinson, Mr. Bodmer, and many more have written valuable and comprehensive works on the subject, but friends have induced me to place this little volume before the reader because all the books previously published are too abstruse in mathematics, and not practical. This is what I have tried, as much as possible, to avoid, and if I have succeeded my object has been attained.

This book is intended as an introduction only to hydraulic motors, and deep, and in many cases useless, calculations are avoided. Having long ago experienced the lack of handy information, it is hoped the remarks herein may prove useful to those seeking acquaintance with this pleasing and useful subject.

A table of square and cube-roots, advancing by half-inches, is given, as they frequently occur in the calculations; also a table giving the pressure of water in lbs. per square

inch, with heads in feet, yards, fathoms and metres, from 5 to 1000 feet, advancing by 5 feet.

For convenience of those readers who wish to go more deeply into the study of the various water-motors, I give the titles of the following useful books:—

'Millgearing,' by Sir William Fairbairn.
'Turbines,' by William Cullen.
'Water-wheels,' by William Donaldson.
'Spons' Dictionary of Engineering.'
'Hydraulic Motors,' by G. R. Bodmer.
'Turbine Manual,' by C. L. Hett.
'Rural Water Supply,' by C. L. Hett.
'Water Engineering,' by C. Slagg.
'Des machines et appareils destinés à l'élévation des Eaux,' by Arthur Morin.
'The Engineer,' years 1872 and 1876.
'Mechanical World,' year 1884.
'Practical Engineer,' year 1892.

P. R. B.

SYERSTON, NOTTS: 1893.

CONTENTS

CHAPTER		PAGE
I.	INTRODUCTION	1
II.	HYDRAULICS RELATING TO WATER-MOTORS	6
III.	WATER-WHEELS	17
IV.	BREAST WATER-WHEELS	29
V.	OVERSHOT AND HIGH-BREAST WATER-WHEELS	37
VI.	PELTON WATER-WHEELS	40
VII.	GENERAL REMARKS ON WATER-WHEELS	54
VIII.	TURBINES	65
IX.	OUTWARD-FLOW TURBINES	69
X.	INWARD-FLOW TURBINES	81
XI.	MIXED-FLOW TURBINES	88
XII.	PARALLEL-FLOW TURBINES	90
XIII.	CIRCUMFERENTIAL-FLOW TURBINES	97
XIV.	REGULATION OF TURBINES	104
XV.	DETAILS OF TURBINES	115
XVI.	WATER PRESSURE OR HYDRAULIC ENGINES	128
XVII.	RECIPROCATING WATER PRESSURE ENGINES	129
XVIII.	ROTATIVE WATER-PRESSURE ENGINES	152
XIX.	OSCILLATING WATER-PRESSURE ENGINES	158
XX.	ROTARY WATER-PRESSURE ENGINES	179
XXI.	GENERAL REMARKS AND RULES FOR WATER-PRESSURE ENGINES	185
XXII.	HYDRAULIC RAMS	196
XXIII.	HYDRAULIC RAMS WITHOUT AIR-VESSEL IN DIRECT COMMUNICATION WITH THE DRIVE-PIPE	199

CHAPTER		PAGE
XXIV.	HYDRAULIC RAMS WITH AIR-VESSEL IN DIRECT COMMUNICATION WITH THE DRIVE-PIPE	227
XXV.	HYDRAULIC PUMPING RAMS	230
XXVI.	HYDRAULIC RAM ENGINES	243
XXVII.	DETAILS OF HYDRAULIC RAMS	252
XXVIII.	RULES, FORMULAS AND TABLES FOR HYDRAULIC RAMS ..	264
XXIX.	MEASURING WATER IN A STREAM AND OVER A WEIR ..	272
	INDEX	279

ILLUSTRATIONS

FIG.		PAGE
1.	MIDSTREAM WATER-WHEELS	18
2.	FLOAT-BOARDS FOR A MIDSTREAM WATER-WHEEL	19
3, 4.	ORDINARY UNDERSHOT WATER-WHEELS	21
5.	CURVED BUCKETS FOR UNDERSHOT WATER-WHEELS	22
6.	PONCELET UNDERSHOT WATER-WHEELS	26
7.	BUCKETS FOR PONCELET UNDERSHOT WATER-WHEELS	26
8.	BREAST WATER-WHEELS	29
9.	TWO-PART BUCKETS FOR BREAST WATER-WHEELS	31
10.	THREE-PART BUCKETS FOR BREAST WATER-WHEELS	32
11.	CURVED BUCKETS FOR BREAST WATER-WHEELS	33
12, 13.	BUCKETS WITH VENTILATING SPACE FOR BREAST WATER-WHEELS	34
14.	IRON BUCKETS FOR SLOW SPEED BREAST WATER-WHEELS	36
15.	OVERSHOT WATER-WHEELS	38
16–21.	PELTON WATER-WHEELS	41–46
22, 23.	HETT'S PATENT PELTON WATER-WHEELS	48, 49
23A, 23B.	CADLE'S PATENT DUPLEX PELTON WATER-WHEEL	51, 52
24.	SLUICE FOR PONCELET WATER-WHEELS	56
25.	SLUICE FOR OVERSHOT WATER-WHEEL	57
26–28.	SLUICES FOR BREAST WATER-WHEELS	58, 59
29–34.	SHROUDINGS FOR WATER-WHEELS	60–64
35, 36.	BARKER'S MILL	69
37.	DIAGRAM SHOWING ACTION OF RE-ACTION TURBINES	71
38, 39.	WHITELAW'S OUTWARD-FLOW TURBINE	72
40.	REDTENBACHER'S OUTWARD-FLOW TURBINE	73
41, 42.	FOURNEYRON'S OUTWARD-FLOW TURBINE	74, 75
43.	FOURNEYRON'S OUTWARD-FLOW TURBINE	77

FIG.		PAGE
44, 45.	Inward-flow Turbine	82, 83
46, 47.	Thomson's Inward-flow Turbine	84, 86
48.	Mixed-flow Turbine	88
49.	Jonval's Parallel-flow Turbine	91
50.	Girard's Parallel-flow Turbine	92
51–53.	Construction of Vanes for Jonval Parallel-flow Turbine	93, 94
54, 55.	Schiele's Circumferential-flow Turbine	97, 98
56, 57.	Zuppinger's Circumferential-flow Turbine	100
58–61.	Radial-flow Turbine	101, 102
62.	Regulation of Inward-flow Turbines	106
63.	Regulation of Parallel-flow Turbine	107
64–70.	Regulation of Parallel-flow Turbines	108–113
71–74.	Top Bearings for Turbines	115–118
75–81.	Bottom-bearings or Foot-steps for Turbines	119–121
82.	Hett's Turbine Governor	124
83.	The Snow Turbine Governor	126
84–86.	Junker's Reciprocating Water-pressure Engine	130, 131
87, 88.	Trevithick's Reciprocating Water-pressure Engine	132
89.	Fairbairn's Reciprocating Water-pressure Engine	134
90.	Belidor's Reciprocating Water-pressure Engine	135
91.	Double-acting Reciprocating Engine without Auxiliary Slide-valve	137
92, 93.	Double-acting Reciprocating Engine, with Auxiliary Slide-valve	138, 139
94, 95.	Joy's Reciprocating Engine	141, 142
96.	Pfetsh's Reciprocating Engine	143
97, 98.	Davey's Reciprocating Engine	145, 146
99, 100.	Björling's Reciprocating Engine	147
101–103.	Davey's Reciprocating Engine	149, 150
104.	Johnston's Reciprocating Engine	151
105, 106.	Relief-valves for Rotative Engines	153
107, 108.	Meyer's Rotative Engine	155, 156
109, 110.	Lord Armstrong's Oscillating Engine	158
111–113.	Three-cylinder Oscillating Engine	159, 160
114–116.	Schmid's Oscillating Engine	162
117–120.	Wyss and Studer's Oscillating Engine	163, 164

FIG.		PAGE
121, 122.	HAAG'S OSCILLATING ENGINE	166
123.	RAMSBOTTOM'S OSCILLATING ENGINE	168
124–131.	HASTIE'S OSCILLATING ENGINE	169–173
132–134.	BROTHERHOOD'S THREE-CYLINDER ENGINE ..	174, 175
135.	RIGG'S FOUR-CYLINDER ENGINE	176
136.	ROTARY WATER-PRESSURE ENGINE	179
137–139.	PITMAN'S ROTARY ENGINE	181, 182
140, 141.	ESCHER, WYSS & CO.'S ROTARY ENGINE	183, 184
142.	JOY'S VALVE-GEAR..	188
143.	DAVEY'S VALVE-GEAR	189
144.	BJÖRLING'S VALVE-GEAR	190
145.	VALVE-GEAR..	191
146.	VALVE-GEAR..	192
147.	ARRANGEMENT OF HYDRAULIC ENGINE IN DIP-WORKINGS ..	193
148.	HYDRAULIC RAM	197
149.	WHITEHURST'S HYDRAULIC RAM	200
150.	MONTGOLFIER'S HYDRAULIC RAM	201
151.	BOULTON AND WATT'S HYDRAULIC RAM	201
152.	HETT'S HYDRAULIC RAM..	203
153, 154.	MASSEY'S HYDRAULIC RAM..	204, 205
155.	MORROW'S HYDRAULIC RAM	206
156–159.	FISCHERS' HYDRAULIC RAM	207–210
160.	HANSON'S HYDRAULIC RAM	211
161, 162.	KEITH'S HYDRAULIC RAM	213
163.	DUROZOI'S HYDRAULIC RAM	215
164–169.	BOLÉE'S HYDRAULIC RAM	216–219
170.	HYDRAULIC INJECTION RAM	220
171.	BLAKE'S HYDRAULIC RAM	221
172.	DAVIES'S ACCUMULATOR FOR HYDRAULIC RAMS	222
173.	DAVIES'S SELF-STARTING AND STOPPING HYDRAULIC RAM ..	223
174.	GRIER'S SENTINEL FOR HYDRAULIC RAMS	225
175.	EASTON AND AMOS' HYDRAULIC RAM	227
176.	BLAKE'S AIR-CHAMBER AND SPRING-PISTON HYDRAULIC RAM	229
177.	HETT'S HYDRAULIC PUMPING-RAM	231
178.	FYFE'S HYDRAULIC PUMPING-RAM	232
179.	HYDRAULIC PUMPING-RAM WITH WEIGHTED DIAPHRAGM ..	233

FIG.		PAGE
180, 181.	KEITH'S HYDRAULIC PUMPING-RAM	234, 235
182.	BLAKE'S PUMPING-RAM	237
183.	DUROZOI'S HYDRAULIC PUMPING-RAM	238
184.	MONTGOLFIER'S HYDRAULIC PUMPING-RAM	239
185.	HYDRAULIC SYPHON PUMPING-RAM	241
186.	SOMMEILLIER'S HYDRAULIC RAM ENGINE FOR COMPRESSING AIR	244
187.	PEARSALL'S HYDRAULIC RAM ENGINE	249
188.	PEARSALL'S HYDRAULIC RAM ENGINE FOR COMPRESSING AIR	250
189–198.	PULSE-VALVES	253–258
199–201.	DELIVERY-VALVES	259, 260
202–204.	SNIFTING-VALVES	261, 263
205.	WEIR OR TUMBLING-BAY	273
206.	V-SHAPED WEIR	274

WATER OR HYDRAULIC MOTORS.

CHAPTER I.

INTRODUCTION.

CONSIDERING the vast and certain amount of force available from tides, rivers, waterfalls, and the wind, it seems to an enthusiastic economist strange that such should be almost ignored by the great fuel-consumers for producing motive-power.

The truth, however, is simply this: "While fully alive to the fact that more power is running loose than the aggregate horse-power of the world, means are lacking at present to utilise it. Steam engines can generally be put down to suit the requirements of manufacturers, &c., while a river or waterfall often demands a visit from Mahomet."

To imagine the methods of centuries ago again taking their position and possibly superseding our steam engines seems a step backwards; yet it is more than probable that the utilisation of the existing powers of nature through the medium of dynamos, cheap accumulators, and a few miles of wire will be another step on the ladder of progress. With many people, the utilisation of water-power appears out of date and not worth considering. However, with an eye on the future, it is thought some information relative to water motors may be of service to those interested in the subject.

Windmills are certainly growing more in favour for working dynamos, especially in America, and in a few cases turbines and water-wheels are resorted to.

When windmills are used, it is necessary to employ accumulators, by means of which the electricity is stored up to give a supply during drought; these accumulators add greatly to the first cost and increase the working expenses, also occupy a large space, which, in places thickly populated, is an expensive item. When some means are discovered by which we can obtain electricity in a cheap way, without motive-power, then we shall get what is required, but until that time arrives, we must employ the means that has been provided for us by mother Nature, water-power, &c.

It appears that almost every motive-power machine was originally invented for the purpose of raising water.

History informs us that the Chinese were the first to use water-wheels, as a means for raising water from the rivers for irrigating purposes. These wheels were ingeniously constructed from bamboo canes. Two upright posts were firmly set in the bed of the river in a line perpendicular to its banks, and high enough to raise the periphery of the wheel above the banks. The axle, usually about 10 feet long, rested upon these two upright posts. The remainder of the wheel was formed entirely of bamboo. The rim, spokes and floats, or buckets, were formed of large pieces, firmly bound together by cordage, made of bamboo fibres. The frame of the wheel consisted of 16 to 18 spokes framed into the axle obliquely near the extremity, and crossing each other at about two-thirds of their length. The wheel was strengthened by a concentric circle passing through the points where the spokes crossed, and the ends of the spokes were secured to the two rims. The spokes next to the back being about 15 inches shorter than the outer spokes. Between the rim and the cross of the spokes was a triangular space, which was woven with close basket-work, forming the floats or buckets, by means of which the motion was imparted to the

wheel. The buckets for raising the water consisted of hollow bamboo canes closed at one end and attached to two spokes of the wheel, and so fixed that when they were on a level with the axle they had an inclination of about 25° to the axle of the wheel. The closed end of the tube was of course the lowest, and was fastened to the outer or largest rim, while the open end was attached to the smaller rim nearest the bank. In that position the buckets dipped into the stream, as the wheel revolved, and raised with the open end uppermost. Their inclination, which was gradual, changed as they raised, yet so slightly as not to discharge the water until they reached the top. At this point they poured their contents into a wide trough, from which it was distributed to the plantation. These wheels were from 20 to 40 feet in diameter, according to the height of the river banks and consequently the height to which the water had to be raised.

As the engineering practice improved, so did the water-wheel; they were next made of wood, then of cast iron, and more recently still of wrought iron and steel, and built on more scientific principles.

A great improvement in undershot water-wheels was made by M. Poncelet, about the year 1825, when he invented the water-wheel which up to the present time bears his name. The low ratio of effect transmitted by the common radial float wheel, induced that celebrated Frenchman to examine scientifically the conditions upon which the efficiency of this species of wheel depended, with a view to ascertain whether it might be rendered more economical in its action. The investigation, which embraced a very extensive series of experiments, led to the discovery that the float, instead of presenting a plane radial surface to the impulse of the water, should consist of circular arcs of assignable radii of curvature, and, moreover, to be disposed by the condition that the greatest possible amount of *vis viva*, or inherent energy of the moving current, should be rendered available upon the

wheel at the moment of impulse. The necessity of departing from the received practice was fully demonstrated by mathematical considerations, and confirmed by the successful substitution of a wheel constructed on the new principle developed and recommended by M. Poncelet, in place of one of the old form.

Water-wheels, not being adapted for great pressures or high falls, have, to a certain degree, had to retire from the field in favour of turbines, which latter can be used for almost any head or pressure of water, and give most excellent results.

Turbines, in their primitive form, are very ancient, dating as far back as 70 years B.C. They were of a small size, and consisted simply of a few vanes or boards, secured to the lower end of a mill-stone spindle. Against these vanes the current was directed, and by its impact caused the axle to revolve. These wheels are still used in many parts of India and the East.

Turbine was the name originally given in France to all water motors with vertical shaft or spindle, the motor itself revolving horizontally.

The first turbine resembling somewhat the modern type was designed by M. Borda; the water entering the wheel fell down on a curved paddle, like an inclined plane, and acted by its weight.

The development of the turbine dates back to the year 1827. A prize was, at that time, offered by the Société d'Encouragement for a motor of this kind, which should be an improvement upon the turbines used up to that date, the prize being awarded to M. Fourneyron, whose turbines, slightly modified, are used even now.

In many situations, however, neither water-wheels nor turbines are suitable; in such cases the water-pressure engines are admirably adapted. At first these were erected on the surface and raised the water from pit and mine shafts or wells. They originated in Hungary, hence the original

name given to them was Hungarian Machines. These machines are useful and convenient in mountainous countries, where a convenient fall can be obtained. There are many places where these machines might be introduced with great advantage, both at the top of the shaft and underground in dip-workings.

Not unfrequently hydraulic or water-pressure engines, with rotatory motions, either oscillating, or fitted like an ordinary steam engine, without lap on the slide valve, are used, especially for small powers, worked by water from the town mains.

A great deal of trouble was at first experienced in obtaining a water pressure great enough, very few towns at that time having waterworks, therefore making the engines very large and heavy. This difficulty was, however, overcome by Lord Armstrong, when he, in the year 1851, invented the dead-weight accumulator, and later on, when Mr. Browne invented his steam accumulator, which latter is largely employed for working the hydraulic machinery on board ships, where hanging weights cannot be used, being affected by the rolling of the vessel.

Another objection to these engines was the great shock produced by the reversal of the piston at the end of every stroke; this was also overcome by Lord Armstrong.

We now come to a simple, ingenious, and much neglected machine for raising water, which is called the Hydraulic Ram, or Hydraulic Momentum Machine. This useful apparatus was without a doubt the invention of Mr. Whitehurst, of Derby, although his machine was not automatic. The inventor of the self-acting hydraulic ram was M. Montgolfier the great French engineer, of balloon fame.

CHAPTER II.

HYDRAULICS RELATING TO WATER MOTORS.

THE principal losses occurring in water-motors are many, such as: sharp and angular divisions of the stream in entering the motor, or in the water's course through the motor, causing impact, or the conversion of a portion of the energy into head instead of useful work; the velocity of the water, as it leaves the bucket or cylinder, representing energy which has not been converted into work; the frictional resistance offered to the motion of the water by the wetted surfaces of the buckets, vanes, or cylinders, causing also the conversion of a portion of the energy into head instead of work.

From the above it will be seen that the bucket or admission to a cylinder should have a surface at the entrance parallel to the relative course of the stream, and the buckets or exhaust passages should be curved so as to avoid sharp angles being presented to the stream. If the stream is sharply deflected, a portion of the water is backed, the smoothness of the stream is disturbed, and result considerable loss by impact and otherwise.

The discharging edge of buckets should be as nearly tangential to the periphery of the wheel as possible, bearing in mind the clearance of the next bucket, and a great difference of the velocity in the parts of the escaping water should be avoided.

The wetted surface in the motor should be small, as friction is proportional to that surface.

1 cubic foot of water equals 62·425 or in practice 62½ lbs.

1 gallon equals 10 lbs.

1 cubic foot of water equals 6·24 gallons or in practice 6¼ gallons.

1 gallon equals 0·16 cubic foot.

62½ lbs. being the weight of one cubic foot of water, 528 cubic feet per minute equals one horse-power for every foot of fall of the water, when the water is acted upon by a steady water-pressure. From one-fifth to two-fifths of this power is absorbed by friction. The usual power obtained by well-constructed water-wheels is two-thirds of the actual power. In such cases, of course, the quantity of water required to produce one effective horse-power will be 792 cubic feet per minute for each foot of fall, and the quantity falling on each bucket, in a water-wheel, if well constructed, should equal 720 cubic feet per minute, or 12 cubic feet per second, which gives a modulus of 73 per cent.

Pressure of water in pounds per square inch equals head of water in feet multiplied by 0·433, or in practice 0·44.

Head of water in feet equals pressure of water in pounds per square inch multiplied by 2·0307.

TABLE I.—PRESSURE OF WATER AT DIFFERENT HEADS IN POUNDS PER SQUARE INCH.

Head of Water in feet.	Head of Water in yards.	Head of Water in fathoms.	Head of Water in metres.	Pressure of Water in lbs. per sq. inch.	Head of Water in feet.	Head of Water in yards.	Head of Water in fathoms.	Head of Water in metres.	Pressure of Water in lbs. per sq. inch.
5	1·66	0·83	1·52	2·16	50	16·6	8·3	15·2	21·6
10	3·33	1·66	3·04	4·33	55	18·3	9·16	16·7	23·8
15	5·00	2·50	4·57	6·49	60	20 0	10·0	18·2	25·9
20	6·66	3·33	6·09	8·66	65	21·6	10 8	19·8	28·1
25	8·33	4·16	7·62	10·80	70	23·3	11·6	21·3	30 3
30	10·00	5·00	9·14	12·90	75	25·0	12·5	22·8	32 4
35	11·60	5·83	10·60	15·10	80	26·6	13 3	24·3	34·6
40	13·3	6·66	12·1	17·3	85	28·3	14·1	25·9	36·8
45	15·0	7·50	13·7	19·4	90	30·0	15 0	27·4	38·9

TABLE I.—*continued.*

Head of Water in feet.	Head of Water in yards.	Head of Water in fathoms.	Head of Water in metres.	Pressure of Water in lbs. per sq. inch.	Head of Water in feet.	Head of Water in yards.	Head of Water in fathoms.	Head of Water in metres.	Pressure of Water in lbs. per sq. inch.
95	31·6	15·8	28·9	41·1	305	101·6	50·8	92·9	132·1
100	33·3	16·6	30·4	43 3	310	103·3	51·6	94·4	134·3
105	35·0	17·5	32·0	45·4	315	105·0	52·5	96·0	136·4
110	36 6	18·3	33·5	47·6	320	106·6	53·3	97·5	138·6
115	38·3	19·1	35·0	49·8	325	108 3	54·1	99·0	140·8
120	40·0	20·0	36·5	51·9	330	110·0	55·0	100·5	142·9
125	41·6	20·8	38·1	54·1	335	111·6	55·8	102·1	145·1
130	43·3	21·6	39·6	56·3	340	113·3	56·6	103·6	147·3
135	45·0	22·5	41·1	58·4	345	115·0	57·5	105·1	149·4
140	46·6	23·3	42·6	60·6	350	116·6	58·3	106·6	151·6
145	48·3	24·1	44·1	62·8	355	118·3	59·1	108·2	153·8
150	50·0	25·0	45·7	64·9	360	120·0	60·0	109·7	155·9
155	51·6	25·8	47·2	67·1	365	121·6	60·8	111·2	158 1
160	53·3	26·6	48·7	69·3	370	123·3	61·6	112·7	160·3
165	55·0	27·5	50·2	71·4	375	125·0	62·5	114·3	162·4
170	56·6	28·3	51·8	73·6	380	126·6	63·3	115·8	164·6
175	58·3	29·1	53·3	75·8	385	128·3	64·1	117·3	166·8
180	60 0	30·0	54·8	77·9	390	130·0	65·0	118 8	168·9
185	61·6	30·8	56·3	80 1	395	131 6	65·8	120·3	171·1
190	63·3	31·6	57·9	82·3	400	133·3	66·6	121·9	173·3
195	65·0	32·5	59·4	84·4	410	136·6	68·3	124·9	177·6
200	66·6	33·3	60·9	86·6	420	140·0	70·0	128·0	181·9
205	68·3	34·1	62·4	88·8	430	143·3	71·6	131·0	186·3
210	70·0	35·0	64·0	90·9	440	146·6	73·3	134·1	190·6
215	71·6	35·8	65·5	93·1	450	150·0	75·0	137·1	194·9
220	73·3	36·6	67·0	95·3	460	153·3	76·6	140·2	199·3
225	75·0	37·5	68·5	97·4	470	156·6	78·3	143·2	203·6
230	76·6	38·3	70·1	99·6	480	160·0	80·0	146·3	207·9
235	78·3	39·1	71·6	101·8	490	163·3	81·6	149·3	212·3
240	80·0	40·0	73·1	103·9	500	166·6	83·3	152·4	216·6
245	81·6	40·8	74·6	106·1	510	170·0	85·0	155·4	220·9
250	83·3	41·6	76·2	108·3	520	173·3	86·6	158·4	225·3
255	85·0	42·5	77·7	110·4	530	176·6	88·3	161·5	229·6
260	86·6	43·3	79·2	112·6	540	180·0	90·0	164·5	233·9
265	88·3	44·1	80·7	114·8	550	183·3	91·6	167·6	238·3
270	90·0	45·0	82·2	116·9	560	186·6	93·3	170·6	242·6
275	91·6	45·8	83·8	119·1	570	190·0	95·0	173·7	246 9
280	93·3	46·6	85·3	121·3	580	193·3	96 6	176·7	251·3
285	95·0	47·5	86·8	123·4	590	196 6	98·3	179·8	255·6
290	96·6	48·3	88·3	125·6	600	200·0	100·0	182·8	259·9
295	98·3	49·1	89·9	127·8	610	203·3	101·6	185·9	264·3
300	100·0	50·0	91·4	129·9	620	206·6	103·3	188·9	268·6

TABLE I.—*continued.*

Head of Water in feet.	Head of Water in yards.	Head of Water in fathoms.	Head of Water in metres.	Pressure of Water in lbs. per sq. inch.	Head of Water in feet.	Head of Water in yards.	Head of Water in fathoms.	Head of Water in metres.	Pressure of Water in lbs. per sq. inch.
630	210·0	105·0	192·0	272·9	820	273·3	136·6	249·9	355·3
640	213·3	106·6	195·0	277·3	830	276·6	138·3	252·9	359·6
650	216·6	108·3	198·1	281·6	840	280·0	140·0	256·0	363·9
660	220·0	110·0	201·1	285·9	850	283·3	141·6	259·0	368·3
670	223·3	111·6	204·2	290·3	860	286·6	143·3	262·1	372·6
680	226·6	113·3	207·2	294·6	870	290·0	145·0	265·1	376·9
690	230·0	115·0	210·3	298·9	880	293·3	146·6	268·2	381·3
700	233·3	116·6	213·3	303·3	890	296·6	148·3	271·2	385·6
710	236·6	118·3	216·4	307·6	900	300·0	150·0	274·3	389·9
720	240·0	120·0	219·4	311·9	910	303·3	151·6	277·3	394·3
730	243·3	121·6	222·5	316·3	920	306·6	153·3	280·4	398·6
740	246·6	123·3	225·5	320·6	930	310·0	155·0	283·4	402·9
750	250·0	125·0	228·6	324·9	940	313·3	156·6	286·5	407·3
760	253·3	126·6	231·6	329·3	950	316·6	158·3	289·5	411·6
770	256·6	128·3	234·6	333·6	960	320·0	160·0	292·6	415·9
780	260·0	130·0	237·7	337·6	970	323·3	161·6	295·6	420·3
790	263·3	131·6	240·7	342·3	980	326·6	163·3	298·7	424·6
800	266·6	133·3	243·8	346·6	990	330·0	165·0	301·7	428·9
810	270·0	135·0	246·8	350·9	1000	333·3	166·6	304·8	433·3

To find the velocity of the discharge in feet per second of water flowing through a sluice or penstock:—Multiply the square root of the height from the centre of the orifice to the surface of the water by 8·025.

To find the height of fall necessary to give a certain velocity:—Divide the square of the velocity in feet per second by 64·4.

The number of cubic feet of water discharged through a sluice per second is obtained by multiplying the area of the sluice opening in square feet by the number of seconds, and multiplying the product by five times the square root of the height in feet from the centre of the orifice to the surface of the water.

To find the quantity of water in gallons per second discharged through a sluice:—Multiply the area of the

orifice in square feet by the number of seconds, and multiply the product by 31·5 times the square root of the height in feet from the centre of the orifice to the surface of the water.

To find the flow of water over a weir:—Multiply the square root of the depth, in feet, from the surface to the bottom of the orifice, or top of dam, by the sectional area of the water passage in square feet and multiply the product by 3·4, the result being the discharge in cubic feet per second.

Fall of water is the perpendicular distance from where the water meets the water-wheel, to the surface of the water in the tail-race at the time the water-wheel is working.

The head of discharge is the perpendicular height from the surface of the water in the head-race to the centre of the sluice opening.

The head of contact is the distance from the surface of the water to the point where it meets the wheel, in feet.

Effective fall is half the head of contact added to the fall.

Theoretical horse-power equals the quantity of water in cubic feet per minute multiplied by the head of water from the tail-race in feet, and again by 0·001892.

Rule.—When the exact head available is given, in the Table II., multiply the horse-power in the second column by number of cubic feet of water obtainable, the result will be the total horse-power.

Rule.—If the exact head is not given in Table II. multiply the horse-power of 1 foot head by the number of cubic feet of water and then by the number of feet head, the product will be the required horse-power.

Table II. is based upon an efficiency of 85 per cent.

The pressure column is the pipe which conveys the water from its source to the motor.

A body of water at rest in a pipe exerts at any point a pressure proportional to the head or vertical height of the column above that point.

TABLE II.—HORSE-POWER OF ONE CUBIC FOOT OF WATER PER MINUTE UNDER HEADS FROM 1 TO 1100 FEET.

Head in feet.	Horse-power.	Head in feet.	Horse-power.	Head in feet.	Horse-power.	Head in feet.	Horse-power.
1	·0016098	170	·273666	330	·531234	480	·772704
20	·032196	180	·289764	340	·547332	490	·788802
30	·048294	190	·305862	350	·563430	500	·804900
40	·064392	200	·321960	360	·579528	520	·837096
50	·080490	210	·338058	370	·595626	540	·869292
60	·096588	220	·354156	380	·611724	560	·901488
70	·112686	230	·370254	390	·627822	580	·933684
80	·128784	240	·386352	400	·643920	600	·965880
90	·144882	250	·402450	410	·660018	650	1·046370
100	·160980	260	·418548	420	·676116	700	1·126860
110	·177078	270	·434646	430	·692214	750	1·207350
120	·193176	280	·450744	440	·708312	800	1·287840
130	·209274	290	·466842	450	·724410	900	1·448820
140	·225372	300	·482940	460	·740508	1000	1·609800
150	·214170	310	·499038	470	·756606	1100	1·770780
160	·257568	320	·515136				

A column of water in motion in a pipe has an acquired energy expressed in foot-pounds by the weight of water in pounds, multiplied by the square of the velocity of the water in feet per second, divided by 64·4. The acquired energy thus varies directly as the weight and as the square of the velocity.

If the velocity of a given weight of water is not altered, its acquired energy is not increased or diminished. But a column of water moving with an accelerated velocity exerts a less pressure than the same column at rest; and a column of water whose velocity is being retarded exerts a greater pressure than the same column at rest.

If a column of water in motion be suddenly stopped, its acquired energy is spent in producing a blow or shock; hence any water pressure or hydraulic engine, in which the motion of the driving column is suddenly arrested any

number of times per minute, loses in foot-pounds per minute the energy represented by multiplying the weight of water in pounds by the square of the velocity, the result divided by 64·4, and the product multiplied by the number of times per minute that the column is suddenly arrested.

If a water-pressure engine be employed to overcome a constant resistance, its minimum power must be equal to that resistance; and if the velocity of the driving column varies, then its energy varies, and the energy due to the difference between the maximum and minimum velocity is lost. The loss of energy then equals the weight of the water multiplied by the square of the higher velocity in feet per second, divided by 64·4, and the result multiplied by the number of times the column is arrested per minute, minus the weight of the water multiplied by the square of the lower velocity in feet per minute, divided by 64·4, and the result multiplied by the number of times the column is arrested per minute.

Water can be made to produce motion in various ways; by *percussion*, *pressure*, or by *reaction*. It acts by *percussion* when it strikes the portions of any machine obstructing its course, and after exerting its force allowed to flow away immediately after producing the shock; undershot water-wheels are illustrations of this action: water acting simply by *pressure* when it has no initial velocity, or a very small velocity only equal to that of the body on which it acts, moves the latter merely by its weight; motors actuated in this manner are high and low-breast water-wheels, overshot water-wheels, and water-pressure engines with a velocity equal to that of the flowing water. Again, in the third case water acts both by pressure and percussion, when it falls upon a wheel-bucket with a velocity greater than that of the wheel. Finally, water produces its effect by *reaction* in some types of turbines, which are termed reaction turbines.

TABLE III.—SQUARE AND CUBE ROOTS OF WHOLE AND HALF NUMBERS.

No.	Square Root.	Cube Root.	No.	Square Root.	Cube Root.	No.	Square Root.	Cube Root.
1	1·0000	1·0000	22½	4·7431	2·8230	44	6·6332	3·5303
1½	1·2071	1·1299	23	4·7958	2·8439	44½	6·6707	3·5436
2	1·4142	1·2599	23½	4·8474	2·8642	45	6·7082	3·5569
2½	1·5731	1·3511	24	4·8990	2·8845	45½	6·7453	3·5700
3	1·7321	1·4422	24½	4·9495	2·9043	46	6·7823	3·5830
3½	1·8660	1·5149	25	5·0000	2·9240	46½	6·8189	3·5959
4	2·0000	1·5874	25½	5·0495	2·9433	47	6·8557	3·6088
4½	2·1180	1·6487	26	5·0990	2·9625	47½	6·8919	3·6215
5	2·2361	1·7100	26½	5·1476	2·9813	48	6·9282	3·6342
5½	2·3428	1·7635	27	5·1962	3·0000	48½	6·9641	3·6468
6	2·4495	1·8171	27½	5·2438	3·0183	49	7·0000	3·6593
6½	2·5476	1·8650	28	5·2915	3·0366	49½	7·0355	3·6717
7	2·6458	1·9129	28½	5·3388	3·0545	50	7·0711	3·6840
7½	2·7371	1·9565	29	5·3852	3·0723	50½	7·1063	3.6962
8	2·8284	2·0000	29½	5·4312	3·0898	51	7·1414	3·7084
8½	2·9142	2·0401	30	5·4772	3·1072	51½	7·1763	3·7205
9	3·0000	2·0801	30½	5·5224	3·1243	52	7·2111	3·7325
9½	3·0811	2·1173	31	5·5678	3·1414	52½	7·2456	3·7444
10	3·1623	2·1544	31½	5·6123	3·1581	53	7·2801	3·7563
10½	3·2395	2·1892	32	5·6569	3·1748	53½	7·3143	3·7681
11	3·3166	2·2240	32½	5·7007	3·1912	54	7·3485	3·7798
11½	3·3904	2·2567	33	5·7446	3·2075	54½	7·3823	3·7914
12	3·4641	2·2894	33½	5·7878	3·2236	55	7·4162	3·8030
12½	3·5348	2·3204	34	5·8310	3·2396	55½	7·4498	3·8145
13	3·6056	2·3513	34½	5·8735	3·2554	56	7·4833	3·8259
13½	3·6736	2·3807	35	5·9161	3·2711	5 ½	7·5166	3·8372
14	3·7417	2·4101	35½	5·9580	3·2865	57	7·5498	3·8485
14½	3·8073	2·4382	36	6·0000	3·3019	57½	7·5828	3·8597
15	3·8730	2·4662	36½	6·0414	3·3171	58	7·6158	3·8709
15½	3·9365	2·4930	37	6·0828	3·3322	58½	7·6485	3·8820
16	4·0000	2·5198	37½	6·1236	3·3471	59	7·6811	3·8930
16½	4·0616	2·5456	38	6·1644	3·3620	59½	7·7136	3·9040
17	4·1231	2·5713	38½	6·2047	3·3766	60	7·7460	3·9149
17½	4·1829	2·5960	39	6·2450	3·3912	60½	7·7781	3·9257
18	4·2426	2·6207	39½	6·2478	3·4056	61	7·8102	3·9365
18½	4·3008	2·6446	40	6·3246	3·4200	61½	7·8421	3·9472
19	4·3589	2·6684	40½	6·3638	3·4341	62	7·8740	3·9579
19½	4·4155	2·6914	41	6·4031	3·4482	62½	7·9056	3·9685
20	4·4721	2·7144	41½	6·4419	3·4621	63	7·9373	3·9791
20½	4·5274	2·7367	42	6·4807	3·4760	63½	7·9686	3·9896
21	4·5826	2·7589	42½	6·5191	3·4897	64	8·0000	4·0000
21½	4·6365	2·7805	43	6·5574	3·5034	64½	8·0311	4·0104
22	4·6904	2·8020	43½	6·5953	3·5169	65	8·0623	4·0207

TABLE III.—*continued.*

No.	Square Root.	Cube Root.	No.	Square Root.	Cube Root.	No.	Square Root.	Cube Root.
65½	8·0932	4·0310	87½	9·3541	4·4395	109½	10·4642	4·7842
66	8·1240	4·0412	88	9·3808	4·4480	110	10·4881	4·7914
66½	8·1547	4·0514	88½	9·4074	4·4563	110½	10·5119	4·7987
67	8·1854	4·0615	89	9·4340	4·4647	111	10·5387	4·8059
67½	8·2158	4·0716	89½	9·4604	4·4731	111½	10·5594	4·8131
68	8·2462	4·0817	90	9·4868	4·4814	112	10·5830	4·8203
68½	8·2764	4·0917	90½	9·5131	4·4897	112½	10·6066	4·8275
69	8·3066	4·1016	91	9·5394	4·4979	113	10·6301	4·8346
69½	8·3366	4·1115	91½	9·5655	4·5062	113½	10·6536	4·8417
70	8·3666	4·1213	92	9·5917	4·5144	114	10·6771	4·8488
70½	8·3964	4·1311	92½	9·6177	4·5226	114½	10·7005	4·8559
71	8·4261	4·1408	93	9·6437	4·5307	115	10·7238	4·8629
71½	8·4557	4·1505	93½	9·6695	4·5388	115½	10·7471	4·8699
72	8·4853	4·1602	94	9·6954	4·5468	116	10·7703	4·8770
72½	8·5146	4·1698	94½	9·7211	4·5549	116½	10·7935	4·8840
73	8·5440	4·1793	95	9·7468	4·5629	117	10·8167	4·8910
73½	8·5732	4·1888	95½	9·7724	4·5709	117½	10·8398	4·8979
74	8·6023	4·1983	96	9·7980	4·5789	118	10·8628	4·9049
74½	8·6313	4·2078	96½	9·8234	4·5868	118½	10·8858	4·9118
75	8·6603	4·2172	97	9·8489	4·5947	119	10·9087	4·9187
75½	8·6890	4·2265	97½	9·8742	4·6026	119½	10·9316	4·9256
76	8·7178	4·2358	98	9·8995	4·6104	120	10·9545	4·9324
76½	8·7464	4·2451	98½	9·9247	4·6183	120½	10·9773	4·9393
77	8·7750	4·2543	99	9·9499	4·6261	121	11·0000	4·9461
77½	8·8034	4·2635	99½	9·9749	4·6339	121½	11·0227	4·9529
78	8·8318	4·2727	100	10·0000	4·6416	122	11·0454	4·9597
78½	8·8600	4·2818	100½	10·0249	4·6493	122½	11·0680	4·9665
79	8·8882	4·2908	101	10·0499	4·6570	123	11·0905	4·9732
79½	8·9162	4·2999	101½	10·0747	4·6647	123½	11·1130	4·9799
80	8·9443	4·3089	102	10·0995	4·6723	124	11·1355	4·9866
80½	8·9722	4·3178	102½	10·1242	4·6799	124½	11·1579	4·9933
81	9·0000	4·3267	103	10·1489	4·6875	125	11·1803	5·0000
81½	9 0279	4·3356	103½	10·1735	4·6951	125½	11·2027	5·0067
82	9·0554	4·3445	104	10·1980	4·7027	126	11·2250	5·0133
82½	9·0829	4·3533	104½	10·2225	4·7102	126½	11·2472	5·0199
83	9·1104	4·3621	105	10·2470	4·7177	127	11·2694	5·0265
83½	9·1378	4·3708	105½	10·2713	4·7252	127½	11·2916	5·0331
84	9·1652	4·3795	106	10·2956	4·7326	128	11·3137	5·0397
84½	9·1924	4·3882	106½	10·3199	4·7401	128½	11·3358	5·0463
85	9·2195	4·3968	107	10·3441	4·7475	129	11·3578	5·0528
85½	9·2466	4·4054	107½	10·3682	4·7549	129½	11·3598	5·5059
86	9·2736	4·4140	108	10·3923	4·7622	130	11·4018	5·0658
86½	9·3005	4·4225	108½	10·4163	4·7695	130½	11·4237	5·0720
87	9·3274	4·4310	109	10·4403	4·7769	131	11·4455	5·0788

TABLE III.—*continued.*

No.	Square Root.	Cube Root.	No.	Square Root.	Cube Root.	No.	Square Root.	Cube Root.
131½	11·4673	5·0852	153½	12·3895	5·3540	175½	13·2477	5·5990
132	11·4891	5·0916	154	12·4097	5·3601	176	13·2665	5·6041
132½	11·5109	5·0981	154½	12·4298	5·3659	176½	13·2853	5·6094
133	11·5326	5·1045	155	12·4499	5·3717	177	13·3041	5·6147
133½	11·5542	5·1109	155½	12·4700	5·3773	177½	13·3229	5·6200
134	11·5758	5·1172	156	12·4900	5·3832	178	13·3417	5·6252
134½	11·5974	5·1236	156½	12·5100	5·3890	178½	13·3604	5·6305
135	11·6190	5·1299	157	12·5300	5·3947	179	13·3791	5 6357
135½	11·6405	5·1363	157½	12·5500	5·4004	179½	13·3978	5·6410
136	11·6619	5·1426	158	12·5698	5·4061	180	13 4164	5·6462
136½	11·6832	5·1489	158½	12·5897	5·4118	180½	13·4350	5·6515
137	11·7047	5·1551	159	12·6095	5·4175	181	13·4536	5·6567
137½	11·7260	5·1614	159½	12·6293	5·4232	181½	13·4722	5·6619
138	11·7473	5·1676	160	12·6491	5·4288	182	13·4907	5·6671
138½	11·7686	5·1739	16· ½	12·6689	5·4345	182½	13·5092	5·6723
139	11·7898	5·1801	161	12·6886	5·4401	183	13·5277	5·6774
139½	11·8110	5·1863	161½	12·7083	5·4458	183½	13·5462	5·6826
140	11·8322	5·1925	162	12·7279	5·4514	184	13 5647	5·6877
140½	11 8533	5·1987	162½	12·7475	5·4570	184½	13·5831	5·6929
141	11·8743	5·2048	163	12·7671	5·4626	185	13·6015	5·6980
141½	11·8954	5·2110	163½	12·7867	5·4682	185½	13·6199	5·7032
142	11·9164	5·2171	164	12·8062	5·4737	186	13·6382	5·7083
142½	11·9374	5·2232	164½	12·8257	5·4793	186½	13·6565	5·7134
143	11·9583	5·2293	165	12·8452	5·4848	187	13·6748	5 7185
143½	11·9792	5·2354	165½	12 8647	5·4904	187½	13·6931	5·7236
144	12·0000	5·2415	166	12·8841	5·4959	188	13·7113	5·7287
144½	12·0208	5·2476	166½	12·9035	5·5014	188½	13·7295	5·7338
145	12·0416	5·2536	167	12·9228	5·506)	189	13·7477	5·7388
145½	12·0623	5·2596	167½	12·9422	5·5124	189½	13·7659	5·7439
146	12·0830	5·2656	168	12·9615	5·5178	190	13·7840	5·7489
146½	12·1037	5·2716	168½	12·9808	5·5233	190½	13·8022	5·7540
147	12·1244	5 2776	169	13·0000	5·5288	191	13·8203	5·7590
147½	12·1450	5·2836	169½	13·0192	5·5343	191½	13·8384	5·7640
148	12·1655	5·2896	170	13·0384	5·5397	192	13·8564	5 7690
148½	12·1861	5·2956	170½	13·0576	5·5451	192½	13·8744	5·7740
149	12·2066	5·3015	171	13·0767	5·5505	193	13·8924	5·7790
149½	12·2270	5·3074	171½	13·0958	5·5559	193½	13·9104	5·7840
150	12·2474	5·3133	172	13·1149	5·5613	194	13·9284	5·7890
150½	12·2678	5·3192	172½	13·1339	5·5667	194½	13·9463	5·7940
151	12·2882	5·3251	173	13·1529	5·5721	195	13·9642	5·7989
151½	12·3085	5·3310	173½	13·1719	5·5775	195½	13·9821	5·8039
152	12·3288	5·3368	174	13·1909	5·5828	196	14·0000	5·8088
152½	12·3491	5·3427	174½	13·2099	5·5883	196½	14·0179	5·8137
153	12·3693	5·3485	175	13·2288	5·5938	197	14·0357	5·8186

TABLE III.—*continued.*

No.	Square Root.	Cube Root.	No.	Square Root.	Cube Root.	No.	Square Root.	Cube Root.
197½	14·0535	5·8236	221	14·8661	6·0459	247	15·7162	6·2743
198	14·0712	5·8285	222	14·8997	6·0550	248	15·7480	6·2828
198½	14·0890	5·8334	223	14·9332	6·0641	249	15·7797	6·2912
199	14·1067	5·8383	224	14·9666	6·0732	250	15·8114	6·2996
199½	14·1244	5·8432	225	15·0000	6·0822	251	15·8430	6·3080
200	14·1421	5·8480	226	15·0333	6·0912	252	15·8745	6·3164
201	14·1774	5·8578	227	15 0665	6·1002	253	15·9060	6·3247
202	14·2127	5·8675	228	15·0997	6·1091	254	15·9374	6·3330
203	14·2478	5·8771	229	15·1327	6·1180	255	15·9687	6·3413
204	14·2829	5·8868	230	15·1658	6·1269	256	16·0000	6·3496
205	14·3178	5·8964	231	15·1987	6·1558	257	16·0312	6·3579
206	14·3527	5·9059	232	15·2315	6·1446	258	16·0624	6·3661
207	14·3875	5·9155	233	15·2643	6·1534	259	16·0935	6·3743
208	14·4222	5·9250	234	16·2971	6·1622	260	16·1245	6·3825
209	14·4568	5·9345	235	15·3297	6·1710	261	16·1555	6·3907
210	14·4914	5·9439	236	15·3623	6·1797	262	16·1864	6·3988
211	14·5258	5·9533	237	15·3948	6·1885	263	16·2173	6·4070
212	14·5602	5·9627	238	15·4272	6·1972	264	16·2481	6·4151
213	14·5945	5·9721	239	15 4596	6·2058	265	16·2788	6·4232
214	14·6287	5 9814	240	15·4919	6·2145	266	16·3095	6·4312
215	14·6629	5·9907	241	15·5242	6·2231	267	16·3401	6·4393
216	14·6969	6·0000	242	15·5563	6·2317	268	16·3707	6·4473
217	14·7309	6·0092	243	15·5885	6·2403	269	16·4012	6·4553
218	14·7648	6·0185	244	15·6205	6·2488	270	16·4317	6·4633
219	14·7986	6·0277	245	15·6525	6·2573			
220	14·8324	6·0368	246	15·6844	6·2658			

The author proposes now to introduce the water motors in the following order, viz.:—

WATER-WHEELS.
TURBINES.
WATER-PRESSURE ENGINES.
HYDRAULIC RAMS.

CHAPTER III.

WATER-WHEELS.

WATER-WHEELS are divided into three classes:—

1. Undershot water-wheels.
2. Breast water-wheels.
3. Overshot and high-breast water-wheels; deriving their respective names from the part of the wheel on which the water is admitted.

UNDERSHOT WATER-WHEELS.

Undershot water-wheels are those that are actuated by means of water being admitted to the under-portion of the wheel's periphery.

The undershot water-wheels are subdivided into:—

Midstream water-wheels,
Ordinary undershot water-wheels, and
Poncelet water-wheels.

MIDSTREAM WATER-WHEELS.

In the midstream water-wheels the motive power consists only of the force due to the velocity of the current of water in the stream. These wheels are fixed in an open stream and used almost exclusively for raising water for irrigating purposes. They are advantageous when there is plenty of water, so that there is no need for economy on that account; they are cheaply made and require very little attention and few repairs. They are particularly adaptable for tidal

rivers, because they will work in either direction, when the float-boards or buckets are straight and radial, as shown in illustration Fig. 1; but, when we take economy into consideration, that is, the greatest power for the smallest diameter of wheel, the float-boards are made straight but not radial. In rivers where the water-level fluctuates greatly the axle of the wheel should be made movable on its supports, to render it capable of being raised or lowered at pleasure, to suit the height of the water-level; but in tidal rivers it is best to have them fitted on pontoons, so that the centre of the wheel axle and level of the water always bear

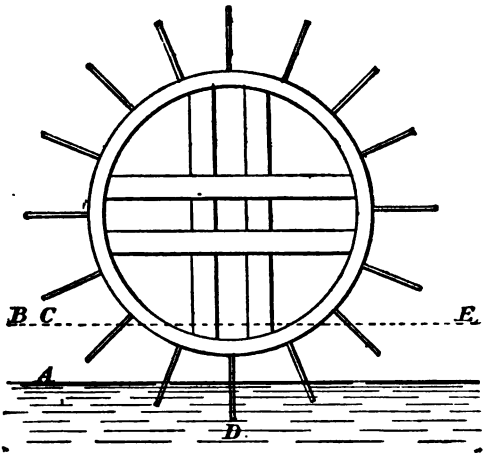

FIG. 1.

the same relations to one another; for when the water-level rises, in the fixed wheel, it affects the action of the wheel; this will readily be seen on reference to Fig. 1, in which A is the proper working water-level and B a high water-level. If the wheel be immersed to a higher level B the float-boards between C and D act with a downward pressure on

the water, and those between D and E act so as to lift up the water. Both these pressures detract from the mechanical efficiency of the water-wheel, and may altogether neutralise the whole force which may be derived from the current if the water-level were only at A. In smaller wheels, a less number of float-boards will be acted upon by the current at the same time, and they leave the water at a greater angle than those of large wheels, consequently there will be the same disadvantage in such a wheel as in a large wheel deeply immersed.

Fig. 2 is an enlarged section of rim showing the construction of the best angle of float-boards for a midstream

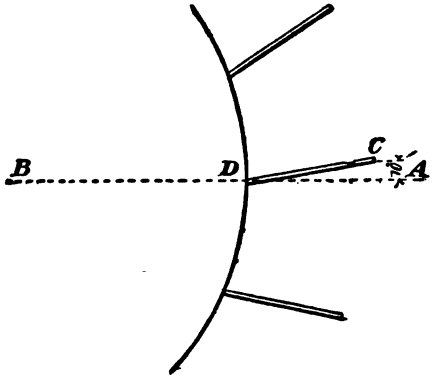

FIG. 2.

water-wheel. These buckets are inclined up the stream at an angle of 10° from the radius line A B; C D is the float-board of wood, the angle A D C being 10°, although some authorities recommend 25° to 30°.

The speed of the wheel must be taken into consideration, for if the periphery of the wheel moves at the same velocity as the water in the river or stream we obtain no power, and

if its motion is too slow the power will be reduced. The most effective circumferential speed of midstream water-wheels has been found to be about one-half of the speed of the water current. Some authorities say that the best speed is obtained by multiplying the velocity of the stream by 0·4, not quite half the speed of the current.

Midstream water-wheels vary from 12 to 16 feet in diameter. The float-boards vary from 9 to 12 in number, and there should always be two of them immersed in the water at the same time; they are made from 24 to 30 inches deep, and dip in the water about half their depth, that is from 12 to 15 inches.

The horse-power of a midstream water-wheel is calculated in the following manner:—

Rule.—Deduct the mean velocity of the float-boards in feet per second from the velocity of the water in the stream, also per second; multiply the result by 0·0028, by the velocity of the stream in feet per second, and by the immersed area of the float-boards in square feet, the result being the horse-power of the wheel.

Example.—If we take a midstream water-wheel working in a stream with a velocity of 11·88 feet per second, and a mean velocity of the float-boards one-half that of the stream, we have:—

5·94 feet per second, and the float-boards, 6 feet long, dipping 12 inches; then

$$11\cdot88 - 5\cdot94 = 5\cdot94, \text{ and}$$

$$0\cdot0028 \times 11\cdot88 \times 5\cdot94 \times 6 = 1\cdot1855; \text{ also,}$$

$$1\cdot1855 \times 5\cdot94 = 7\cdot04 \text{ horse-power.}$$

Ordinary Undershot Water-wheels.

In situations where the velocity of the water is great and a fall of any convenient height cannot be obtained, the ordinary undershot water-wheels are the best.

These water-wheels should be erected in a channel, a

little wider than the width of the wheel; this channel should be wider at the inlet than at the wheel, so as to allow the water to flow into it freely and increase the speed of the current of the water; this is shown in plan Fig. 4. Fig. 3

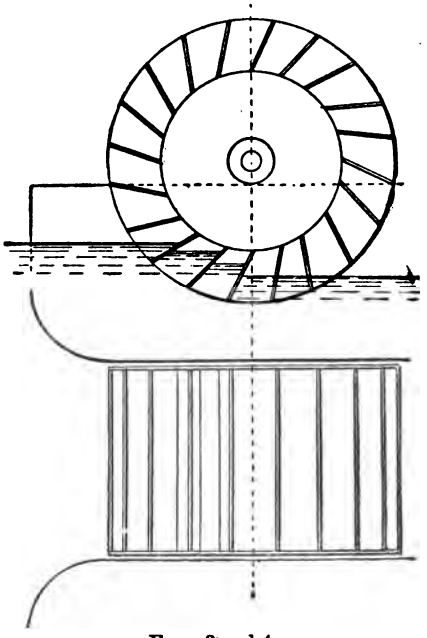

FIGS. 3 and 4.

is an elevation of the water-wheel, and Fig. 5 an enlarged section of the shrouding and the construction of the form of bucket. These wheels are applicable to falls from 7 to 26 inches from the point where the water leaves the wheel.

The construction of the float-boards or buckets of an ordinary undershot water-wheel is similar to the one shown in Fig. 2 for midstream water-wheels; sometimes, however,

these wheels are constructed with curved buckets made of wood or wrought iron. Fig. 5 shows the construction of curved buckets. From the illustration it will be seen that they are inclined up the stream at an angle of 20°; some authorities consider the angle ought to be 30° from the radius line A B; and the radius of the bucket should be one-eighth of the diameter of the wheel. A C D is the angle of

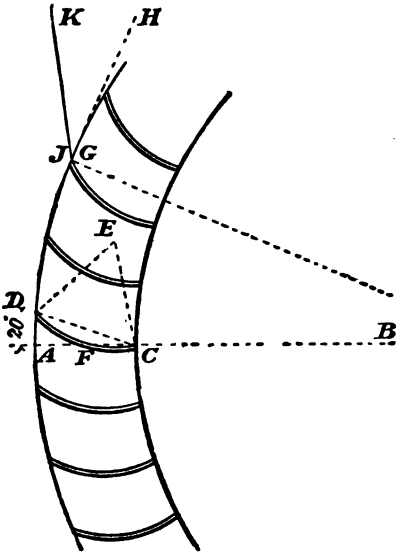

FIG. 5.

20°, and the point E is the centre for the curve D F C of the bucket, which point is fixed in such a position that the curve will exactly touch the points D and C on the outer and inner periphery of the shrouding respectively: J K is the mean direction of the water entering the wheel. The best angle at which the water should be directed on to the

buckets is about 30°, with a tangent G H to the point where the water meets the bucket; hence the line J K is the mean direction of the water. This applies both to straight and curved buckets.

To find the number of float-boards or buckets for an ordinary undershot water-wheel:

Rule.—Multiply the diameter of the wheel in feet by 4, divide the result by 3, and add 12, the total being the number of buckets required for the wheel.

Example.—Required to find the number of buckets for an undershot water-wheel 17 feet in diameter:

$$\frac{17 \text{ feet wheel} \times 4}{3} + 12 = 34{\cdot}66, \text{ say } 34 \text{ buckets},$$

although Mr. William Cullen gives in the appended Table IV. 32 buckets for a 17 feet wheel, and he appears to have no definite rule, probably having compiled the table from wheels in actual use which have worked well.

TABLE IV.—UNDERSHOT WATER-WHEELS.

Height of fall from surface of top to surface of tail-water in feet.	Head of contact in feet.	Velocity of circumference in feet per second.	Diameter of the wheel in feet.	Revolutions per minute.	Number of buckets.	Depth of curved buckets. If straight ¼th broader	Length of buckets for 10 horse-power.
2·7	1·764	5·94	14	8·04	30	1·33	6·00
4·0	2·642	7·27	15	9·26	32	1·63	4·93
5·3	3·528	8·40	16	10·02	32	1·88	4·27
6·6	4·506	9·49	17	10·65	32	2·10	3·70
7·9	5·294	10·29	19	10·34	36	2·30	3·50
9·2	6·165	11·10	19	10·60	40	2·49	3·22

The velocity of the periphery of the ordinary undershot water-wheel is usually found by multiplying the theoretical

velocity due to the head of water by 0·57 or 0·57 V. The value of V will be found at a glance from Table V., calculated by the

Rule.—8·025 multiplied by the square root of the head of water in feet, the result being the theoretical velocity in feet per second.

The depth of the bucket varies from 18 inches to 24 inches; and the dip into the water from 9 inches to 12 inches.

The effective horse-power is found by multiplying 0·0006 by the quantity of water in cubic feet of water used per minute, and again by the head of water in feet.

To find the quantity of water required in cubic feet per minute.

Rule.—Multiply the effective horse-power by 1511 and divide the total by the head of water in feet, the result being the number of cubic feet of water required to develop the given horse-power.

Poncelet Undershot Water-wheels.

When the fall is not above 6 feet, the best form of wheel is the Poncelet water-wheel. This type of undershot water-wheels are by some authorities classed under the head of turbines, because they are actuated by the force due to the rapidity of the current of water and the impulse due to the head or fall of the water combined; but it is not quite so effective as the best forms of turbines.

A water-wheel of this type is shown in illustration Fig. 6 and Fig. 7, the latter being an enlarged section of the shrouding, showing the manner in which the buckets or floats are constructed. It will be seen from Fig. 6 that the water is penned back between the sides of the wheel-race, and allowed to flow, under a movable sluice, on to the wheel nearly at the velocity due to the head. The water is admitted down an incline of 1 in 10, or a curved race, so as

TABLE V.—THEORETICAL VELOCITY OF WATER DUE TO GIVEN HEADS.

Head of water in feet.	Theoretical velocity in feet per second.	Theoretical velocity in feet per minute.	Head of water in feet.	Theoretical velocity in feet per second.	Theoretical velocity in feet per minute.	Head of water in feet.	Theoretical velocity in feet per second.	Theoretical velocity in feet per minute.
1	8·205	481·5	45	53·833	3229·9	89	75·707	4542·4
2	11·345	681·7	46	54·427	3265·6	90	76·131	4567·9
3	13·899	833·9	47	55·016	3301·0	91	76·553	4593·2
4	16·050	963·0	48	55·598	3335·8	92	76·973	4618·3
5	17·944	1076·6	49	56·175	3370·5	93	77·390	4643·4
6	19·657	1179·4	50	56·745	3404·7	94	77·805	4668·3
7	21·232	1273·6	51	57·309	3438·5	95	78·217	4693·0
8	22·698	1361·8	52	57·869	3472·1	96	78·628	4717·7
9	24·075	1444·5	53	58·422	3505·3	97	79·037	4742·2
10	25·377	1522·6	54	58·971	3538·2	98	79·443	4766·6
11	26·615	1596·9	55	59·515	3570·9	99	79·847	4790·8
12	27·799	1667·9	56	60·053	3603·2	100	80·250	4815·0
13	28·934	1736·0	57	60·587	3635·2	105	82·231	4933·9
14	30·026	1801·6	58	61·116	3666·9	110	84·166	5050·0
15	31·080	1864·8	59	61·641	3698·4	115	86·058	5163·5
16	32·100	1926·0	60	62·161	3729·6	120	87·909	5274·5
17	33·087	1985·2	61	62·677	3760·6	125	89·722	5383·3
18	34·047	2042·8	62	63·188	3791·3	130	91·499	5489·9
19	34·980	2098·8	63	63·696	3821·7	135	93·242	5594·5
20	35·888	2153·3	64	64·200	3852·0	140	94·953	5697·2
21	36·775	2206·5	65	64·699	3881·9	145	96·633	5798·0
22	37·640	2258·4	66	65·195	3911·7	150	98·285	5897·1
23	38·486	2309·1	67	65·687	3941·2	155	99·909	5994·5
24	39·314	2358·8	98	66·175	3970·5	160	101·50	6090·5
25	40·125	2407·5	69	66·660	3999·6	165	103·08	6184·9
26	40·919	2455·1	70	67·141	4028·5	170	104·63	6277·9
27	41·699	2501·9	71	67·619	4057·1	175	106·16	6369·6
28	42·464	2547·8	72	68·094	4085·6	180	107·66	6460·0
29	43·215	2592·9	73	68·565	4113·9	185	109·15	6549·1
30	43·954	2637·2	74	69·033	4142·0	190	110·61	6637·0
31	44·681	2680·8	75	69·498	4169·9	195	112·06	6723·7
32	45·396	2723·7	76	69·960	4197·6	200	113·49	6809·4
33	46·100	2766·0	77	70·419	4225·1	210	116·29	6977·6
34	46·793	2783·0	78	70·874	4252·4	220	119·03	7141·8
35	47·476	2848·5	79	71·327	4279·6	230	121·70	7302·3
36	48·150	2889·0	80	71·777	4306·6	240	124·32	7459·3
37	48·814	2928·8	81	72·225	4333·5	250	126·88	7613·1
38	49·469	2968·1	82	72·673	4360·4	260	129·39	7763·9
39	50·116	3006·9	83	73·111	4386·6	270	131·86	7911·8
40	50·754	3045·2	84	73·550	4413·0	280	134·28	8057·0
41	51·385	3083·1	85	73·986	4439·2	290	136·66	8199·6
42	52·007	3120·4	86	74·420	4465·2	300	138·99	8339·8
43	52·623	3157·4	87	74·852	4491·1	320	143·55	8613·3
44	53·231	3193·9	88	75·281	4516·8	340	147·97	8878·4

to enter the wheel without any shock. The buckets, as will be seen from illustrations Fig. 6 and Fig 7, are curved.

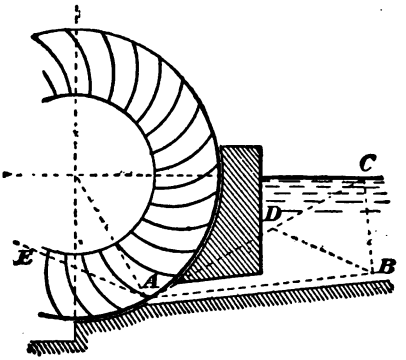

Fig. 6.

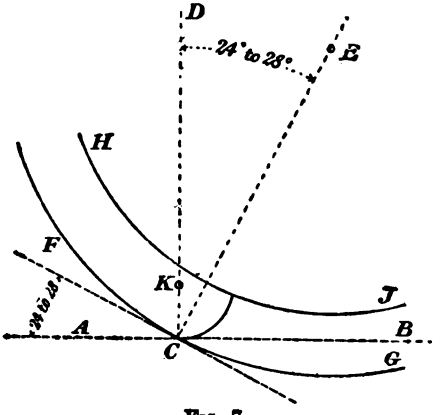

Fig. 7.

The action of the water on the buckets is as follows:—It passes up the curved bucket and there comes to rest, then falls back and acquires at the point of discharge a backward

velocity relative to the wheel, nearly equal to the forward velocity of the same, hence, leaving it deprived of nearly the whole of its kinetic energy.

The velocity of the periphery of these wheels should be equal to the theoretical velocity due to the head of the fall given in Table V. multiplied by 0·55.

The construction of the buckets, shown in Fig. 6, is performed as follows:—Let A B be the direction of the current of water admitted on the bucket, draw off a tangent A C to the periphery of the wheel at the centre of the sluice, at A. Draw B C perpendicular to the line A B, and make C D equal to B C multiplied by 0·4. Join B D, and draw the line A E parallel to B D; then A E is the tangent to the curve of the bucket at its point. The curve must be described with a radius equal to the depth of the shrouding multiplied by 1·2. The depth of the shrouding should be from one-third to one-half of the height of the fall, therefore the radius of the bucket should be from 0·396 to 0·6 of the height of the fall.

Another method by which the curve of the bucket can be obtained is shown in Fig. 7. Draw a horizontal line A B, and from the point C erect a perpendicular C D. C E is the radius of the water-wheel, the angle of which being from 24 to 28 degrees with the perpendicular line C D. Describe the circles F G and H J, the outer and inner periphery of the shrouding of the wheel, from one-third to one-fourth of the head of the fall. Mark off on the line C D a point K, one-sixth of C E, and from K, with a radius C K, describe the curve of the bucket.

The diameter of the Poncelet water-wheels varies from 10 feet to 20 feet, and the circumferential speed from 8 feet to 12 feet per second.

The number of buckets in this type of wheel should be greater than in ordinary undershot water-wheels, and therefore the motion is more equable and continuous.

A good *rule* for the number of buckets is:—Multiply the

diameter of the wheel, in feet, when the wheels are from 10 to 20 feet diameter, by 8, divide the result by 5, and add to the remainder 16.

Example.—If we wish to find the number of buckets required for a 16 feet diameter Poncelet water-wheel:—We have,

$$\frac{16 \times 8}{5} + 16 = 41{\cdot}6, \text{ say } 41 \text{ buckets.}$$

The bottom of the race should fit the wheel accurately for a distance of from 18 inches to 20 inches, from the perpendicular centre line towards the sluice, and past the centre line away from the sluices the race should have an abrupt dip of about 6 inches.

The sluice opening should always be made of such a depth that two buckets are always acted upon by the water at the same time. The greatest depth of sluice, however, must not exceed one-eighth of the depth of the head or fall of water.

The quantity of water required for one of these water-wheels is found by multiplying the horse-power required by 880, and the product divided by the height of fall in feet, the result is the quantity of water required in cubic feet per minute.

Example.—If we require 5 horse-power with a fall of 4 feet, then

$$\frac{5 \times 880}{4} = 1100 \text{ cubit feet of water per minute.}$$

The effective horse-power developed by a wheel of this type is found by multiplying the quantity of water, in cubic feet per minute, available, by the height of fall in feet, and the product multiplied by 0·00113, the result being the effective horse-power.

Example.—The available quantity of water in cubic feet per minute is 1100, fall 4 feet; then

$$1100 \times 4 \times 0{\cdot}00113 = 4{\cdot}972, \text{ say } 5 \text{ horse-power.}$$

CHAPTER IV.

BREAST WATER-WHEELS.

BREAST water-wheels are those on which the water acts a little below the horizontal centre line of the wheel; they are impelled, both by the weight of the water and the momentum, because it is confined, as shown in Fig. 8, hence exerts its motive-force to the greatest advantage. It

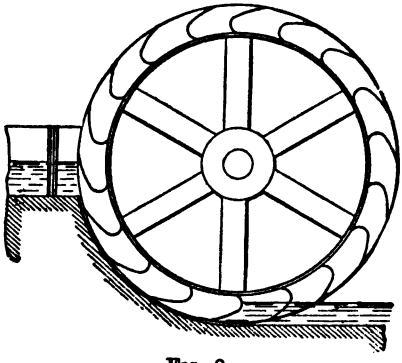

FIG. 8.

will be seen from the illustration that as the water-course is made concentric with the periphery of the wheel, only a small quantity of the drive water can be lost. The admission of the water is regulated by a sluice or penstock. The course should be very carefully made, as stated in the case of the Poncelet water-wheel, so that the periphery of the

wheel will nearly touch the sides, and as little water as possible be allowed to escape the wheel. Much, therefore, depends upon the workmanship, both as regards the wheel and the course; if the water leaks by between the periphery and the brickwork or masonry there is a loss of efficiency of the wheel on that account; again, if the wheel should scrape against the brickwork there will be a loss by means of friction.

There are three types of buckets used for this class of water-wheel, viz. :—

Two-part buckets, three-part buckets, and curved buckets.

The construction of the first type, the two-part bucket, is shown in Fig. 9. A is the external circumference, and B the internal circumference of the wheel; the distance C is the depth of the shrouding; D the length of the flat bottom, usually termed the start; E is the distance between the buckets on the external periphery, and F the length of the wrist, or the depth of bucket measured on the periphery. To construct the bucket draw the two arcs A and B to the proper radii, the distance between them being the depth of the shrouding; divide the external periphery A into equal distances E each representing the distance between the buckets, which, in wheels above 25 feet in diameter, equals the depth of the shrouding multiplied by 1·25, and for wheels above 25 feet diameter should be made equal to the depth of the shrouding. Draw a circle G dividing the depth of the shrouding into two equal parts; then a radial line from the centre of the wheel to the depth of the bucket, set off on the external periphery A, to the circle G, will give the start or bottom of bucket. Then join the point at which S cuts the circle G with the top of the bucket on A, and the proper shape of a two-part bucket is found.

To construct a three-part bucket proceed as follows:— Draw the outer circumference A, Fig. 10, of the wheel and

the inner circumference B, the distance apart of these two circles being the depth of the shrouding C. Divide the distance C into three equal parts, and draw the circles G and H. Set off the distance F equal to the length of bucket on the periphery A, which, in wheels above 25 feet diameter,

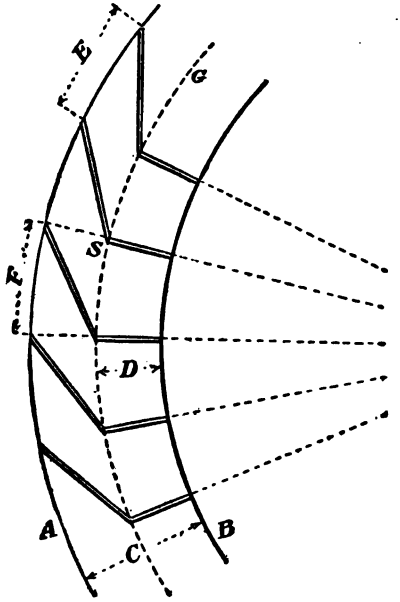

FIG. 9.

should be equal to the depth of the shrouding, and three-fourths of the depth of the shrouding in wheels under 25 feet in diameter. Draw the radial line S for the start, one-third of the depth of the shrouding; the next part of the bucket, between G and H, is called the arm, and will be found by continuing the line S to the periphery, set off from that point one-quarter of the depth of the shrouding and from the

point found draw a radial line, cutting the circle G. This gives the four points necessary for forming the three-part bucket.

We will now proceed with describing how to delineate a curved bucket for breast wheels. As in the other cases draw the external and internal circumferences A and B,

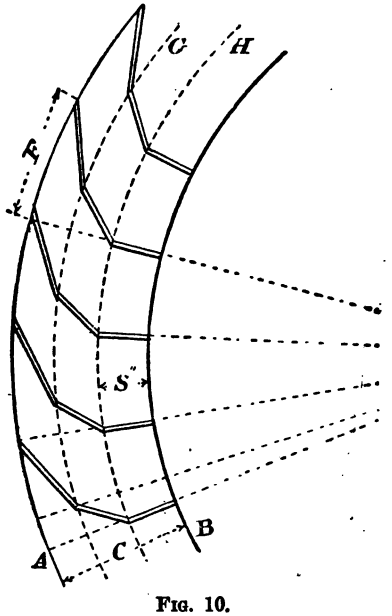

FIG. 10.

Fig. 11, the distance being equal to the depth of the shrouding C, divide the distance C into three equal parts and describe the circle H; mark off on the circumference A the distance apart of the buckets, which is equal to the depth of the shrouding C, also the depth F of the bucket; draw the start S equal to one-third of the depth of the shrouding. The length of bucket curve, measured on the peri-

phery A of the wheel is, as before, equal to the depth of the shrouding multiplied by 1·25 for wheels above 25 feet in diameter, and equal to the depth of the shrouding in wheels under 25 feet in diameter. Now draw a radial line from the top of the bucket on the periphery A, from the point J, set off an angle equal to 25 degrees with the radius

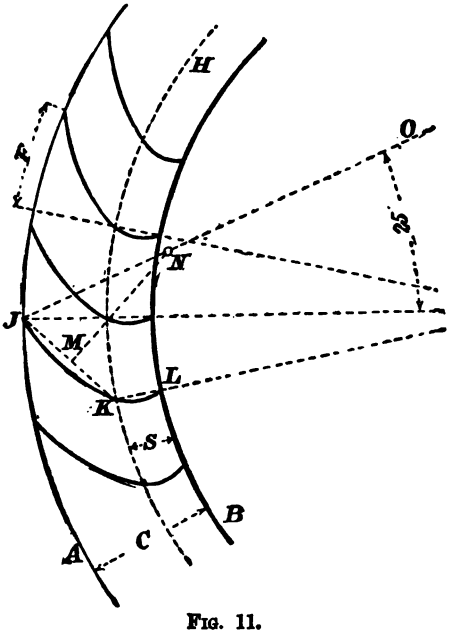

FIG. 11.

line; draw the start K L equal to one-third of the shrouding. Draw the line K J, bisect this line at M, and raise the perpendicular M N. The point of intersection of M N and J O is the centre for the bucket curve, which has a radius N J. The usual way is to describe the start with a radius.

The buckets we have just been describing have no provi-

sion for ventilation, which latter Sir Willian Fairbairn thought necessary for the efficient working of a water-wheel. In Fig. 12 will be found a wood bucket with ventilation space, and Fig. 13 a wrought-iron bucket of the same description. Before the invention of the ventilating bucket, the stream running into the ordinary bucket was made narrower than the wheel, and the shape of the bucket

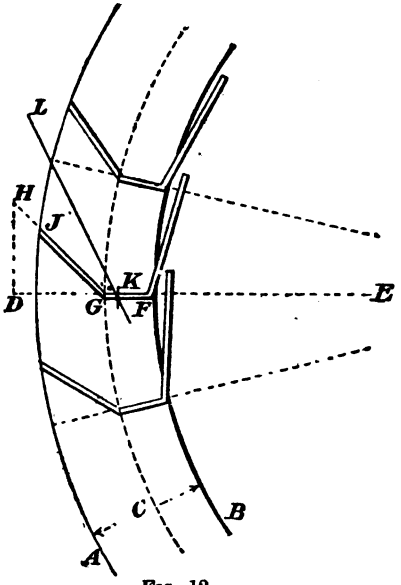

FIG. 12.

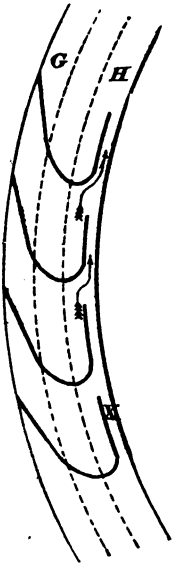

FIG. 13.

was formed so as to receive and part with the water freely. The wood buckets discharge the drive water sooner than the iron buckets, by means of which power is lost; hence there is an advantage in using the latter buckets, as they can be curved to any shape.

We will now proceed to construct the wood ventilating bucket illustrated in Fig. 12. First commence as before by

describing the outer and inner periphery A and B, the distance apart being the depth of the shrouding C; draw a horizontal radius line D E, and divide the depth of the shrouding C into five equal parts, two of the parts are taken for the inner portion of the bucket and the portion and depth of the remainder are found by making the angle D G H, which is an angle to the line D E, of 1 inch to each foot of the entire fall or head of water; and the point where the line G H intersects the periphery A, at J, will be the extremity of the outer portion of the bucket J G F. This slope is given by Mr. Cullen to wheels working on heads of water less than 20 feet, but he found that three-quarters of an inch to the foot was sufficient angle for higher falls. The mean direction of the water entering the wheel will be found by dividing the depth of the shrouding C, Fig. 12, into three equal parts, and the distance between the buckets into two equal parts, then the line K L prolonged, will be the mean direction to give to the water entering the buckets.

The iron buckets, Fig. 13, constructed for either quick or slow speeds, are formed from the straight lines found when constructing the wood buckets. Half of the shrouding is taken for the radius to form the curved part of the bucket between the circles. The space between the inner side of the buckets and the wheel at X is the ventilation space, the air escaping in the direction of the arrows.

Iron buckets for slow speeds are illustrated in Fig. 14. There the distance A B is taken for a radius to form the curve over three divisions of the shrouding, and the inner portion of the curve B C is formed by a radius equal to half the depth of the shrouding. The depth of the shrouding in water-wheels with ventilation buckets is made as much greater as the width of the air outlet X, which is usually one inch.

The depth of the shrouding is, as a rule, 16 inches in breast water-wheels, and the distance between the buckets 18 inches.

The number of buckets is calculated by the following

Rule.—For wheels 12 to 25 feet in diameter, multiply

the diameter of the wheel by 2·1, the result being the number of buckets; wheels from 25 to 40 feet, multiply the diameter of the wheel in feet by 2·3; and in wheels 40 to 50 feet in diameter multiply by 2·4.

TABLE VI.

Height of fall	5	10	15	20	25	30	35	40	45	50
Velocity of periphery in feet per second	7	6·6	6·2	5·8	5·4	5·0	4·6	4·2	3·8	3·4

The bucket opening should be one-fifth of a square foot for each cubic foot of the contents of each bucket, or about 9 to 12 inches wide.

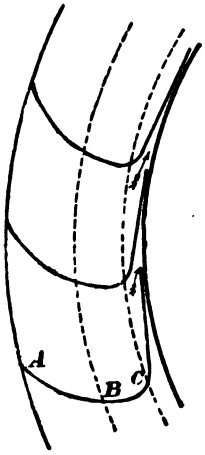

FIG. 14.

The velocity of the periphery of breast water-wheels, in feet per second, varies in proportion to the height of fall of water in feet.

The quantity of water required for a given horse-power is obtained by multiplying the number of horse-powers by 961, and dividing the result by the height of the fall in feet, the product being the quantity of water required in cubic feet per minute.

Example.—Required the quantity of water in cubic feet per minute to give 10 horse-power, the fall being 15 feet high.

$$\frac{10 \times 961}{15} = 640{\cdot}66 \text{ cubic feet per minute.}$$

To find the horse-power.

Rule.—Multiply the cubic feet available per minute by the head of water in feet and by 0·00104, the result being the effective horse-power by the given fall.

Example.—Available quantity of water 640 cubic feet per minute, height of fall 15 feet: then

$$640 \times 15 \times 0{\cdot}0010 = 9{\cdot}984 \text{ effective horse-power.}$$

CHAPTER V.

OVERSHOT AND HIGH-BREAST WATER-WHEELS.

THE overshot water-wheels give a greater power with the least expenditure of water, and are, therefore, adopted where water is scarce. The fall must be rather greater than the diameter of the wheel, and the width is usually made greater than any other type of water-wheel that the edges may be sufficiently capacious to hold a considerable weight of water. For these wheels the fall should be between 10 and 70 feet high, the available quantity of water not less than 3 cubic feet per second, and the fluctuation of the water-level not to exceed 2 feet. There are two ways of admitting the water into these wheels; one is to let it run over a weir direct on to the wheel, when the water will fall in a parabolic path into the buckets. When the variation of water-level exceeds 2 feet a high-breast water-wheel, or pitch-back wheel, is the best, that is when the water falls over the top of a sliding sluice into the buckets on the same side as the head-race channel. By adjusting the height of the sluice, the required supply is given to the wheel in all positions of the head water-level.

An overshot water-wheel is illustrated in elevation, Fig. 15. A is the level of the water in the head-race; B the level in the tail-race; C the penstock or sluice. The buckets are constructed in the same way as those for breast water-wheels, illustrated in Figs. 9, 10, and 11. The approximate number of buckets is obtained by the same method as for breast water-wheels. The depth of the shrouding is made about

12 inches. The bucket opening is one-third of a square foot for each cubic foot of contents of the bucket, or generally about 7 inches in width.

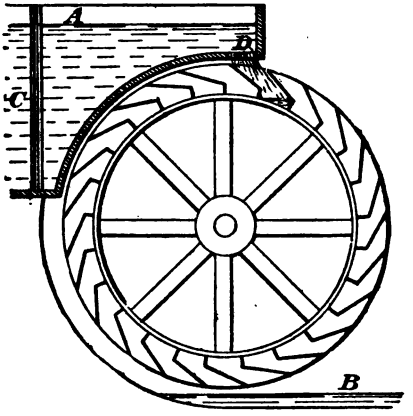

FIG. 15.

The quantity of water, in cubic feet per minute, required for a given number of effective horse-powers will be found by multiplying the given number of horse-powers by 777, and dividing the result by the head of water in feet, the product being the quantity of water required in cubic feet per minute.

Example.—Required the quantity of water to develop 10 horse-powers with a head of 12 feet. Then

$$10 \times 777 = 7770$$

and

$$\frac{7770}{12} = 647{\cdot}5 \text{ cubic feet of water per minute.}$$

To find the effective horse-power, multiply the available quantity of water, in cubic feet per minute, by the head or height of fall, and by 0·00128; the result will be the effective horse-power.

Example.—Available quantity of water 650 cubic feet pe minute, and a head of 12 feet, then

$$650 \times 12 \times 0{\cdot}00128 = 9{\cdot}984 \text{ effective horse-power.}$$

HIGH-BREAST WATER-WHEELS.

These wheels are very similar in construction to the overshot water-wheels, the buckets being constructed in the same manner.

To find the quantity of water, in cubic feet per minute, required by a high-breast water-wheel :—

Rule.—Multiply the required number of horse-powers by 881, and divide the result by the height of the fall in feet.

Example.—Required the number of cubic feet of water to develop 20 horse-powers with a height of fall of 20 feet, then

$$20 \times 881 = 1762$$

and

$$\frac{1762}{20} = 881 \text{ cubic feet of water per minute.}$$

The effective horse-power produced by a high-breast water-wheel will be found by multiplying the quantity of available water in cubic feet per minute by the height of the fall in feet, and again by 0·00113.

Example.—Available quantity of water 880 cubic feet per minute, height of fall 20 feet, then

$$880 \times 20 \times 0{\cdot}00113 = 19{\cdot}888 \text{ effective horse-power.}$$

CHAPTER VI.

PELTON WATER-WHEELS.

THE Pelton water-wheels, like the Poncelet water-wheel, in some respects resemble the Turbine; but they are simpler in construction, less liable to get choked and out of order, and can be worked with much greater heights of fall than any turbine yet designed. The Pelton water-wheel may be termed a tangential reaction water-wheel, the power being derived primarily from the pressure due to the head of water supplied by a pipe discharged upon the wheel through a small nozzle, the size of which is proportioned to the amount of water available, head, and power required. The makers of these water-wheels guarantee 85 per cent. effective duty out of the power due to the height of the fall.

As shown in illustration, Fig. 16, the buckets A, on the periphery of the wheel B, are of a peculiar shape, which divides the stream in such a way as to develop its full force, while in passing out it sweeps against the curved sides with a reactionary influence giving it the effect of a prolonged impact. It is also by this means deflected from the course of the wheel so as to offer no resistance to its motion. That the power of the water is fully exhausted is shown by the fact that it falls from the bucket perfectly inert, no water being carried over; nothing but a mist and a little stream below to indicate force that has been liberated.

The power of this water-wheel does not depend upon the diameter of the wheel, but upon the head and amount of water applied to it. Where a greater power is wanted under

a comparatively low head, a larger wheel is necessary to admit of buckets of sufficient size to deal with a large stream. Wheels of greater diameter are also desirable in many cases as a means of reducing the speed, even in cases where the smaller wheels would furnish all the power wanted. For instance, buckets suitable for smaller wheels are frequently fitted on to wheels of larger diameter on purpose to reduce the speed; this is particularly the case when high heads are dealt with. The two and three-nozzle wheels are only for

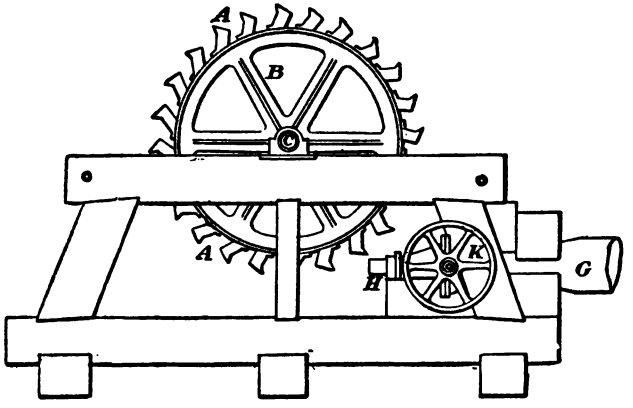

FIG. 16.

the purpose of increasing the power by the use of a large amount of water, and the head is so low that a single stream will not give the power required.

Although the Pelton water-wheel is in reality a high-pressure wheel, it is equally adapted to moderately low falls. They have been actuated by heads from 10 feet to 1680 feet. Six wheels are at work at Chollar Shaft, on the Comstock, under the latter head, giving the great average efficiency of 88 per cent.

There are three types of the Pelton water-wheels, viz.:—

1. Single-nozzle;
2. Double-nozzle; and
3. Multiple-nozzle wheels.

Fig. 16 is an elevation and Fig. 17 a plan of an ordinary Pelton water-wheel, with single nozzle, 6 feet in diameter; A are the buckets; B the wheel; C the wheel shaft carried

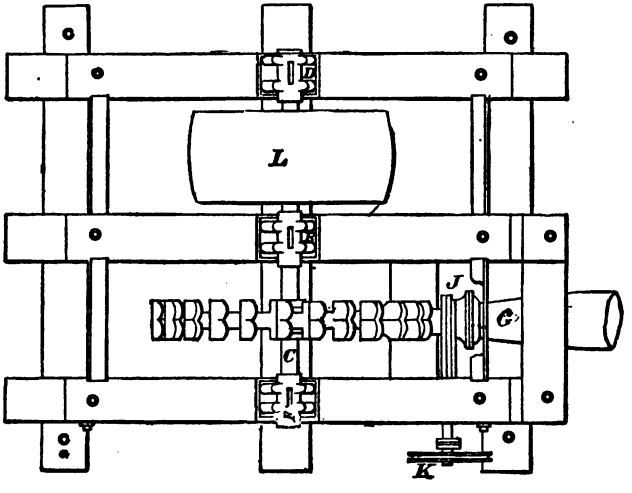

FIG. 17.

in three bearings D, E, and F, supported on a timber framing. If desired brickwork or masonry can be substituted for the wood framing. G is the pressure pipe, which for this size of wheel is 15 inches diameter; H is the nozzle, between which and the water pressure pipe is fixed an ordinary sluice-valve J, opened and closed by means of the hand-wheel K. L is a driving pulley keyed on to the wheel shaft C.

A double-nozzle Pelton water-wheel, also 6 feet in

diameter, is illustrated in elevation, Fig. 18. In this case there are two nozzles H and M secured to the sluice-valve J, and the water-pressure pipe G, the latter being 22 inches diameter. This wheel is designed for low lifts, where sufficient power cannot be obtained from a single nozzle. This arrangement is also advantageous where a variable quantity of water has to be dealt with, as one nozzle can be entirely shut off when the supply, for any reason, partially

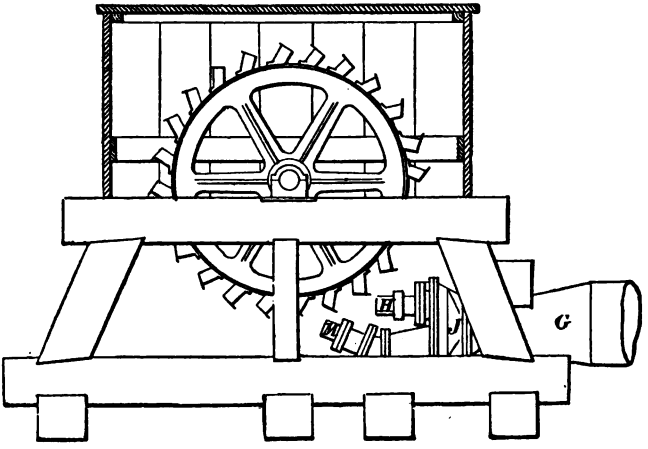

FIG. 18.

or altogether fails, thus keeping the pressure up and using the water to its highest efficiency. In the latter case a separate sluice-valve must be provided for each nozzle.

The third arrangement of Pelton water-wheel is the multiple-nozzle wheel, an elevation of which is shown in Fig. 19. It consists, as in the previously described types, of a wheel B, fitted at its periphery with a number of buckets A. In this illustration is shown a four-nozzle wheel, the nozzles being marked H, M, N, and O, the number, however,

is sometimes increased to six or more, the power being multiplied in that manner, according to the number and size of nozzles, both nozzle and available quantity of water. Each nozzle has an independent sluice valve, J, P, Q, and R, to facilitate regulation and adapt the wheel for varying

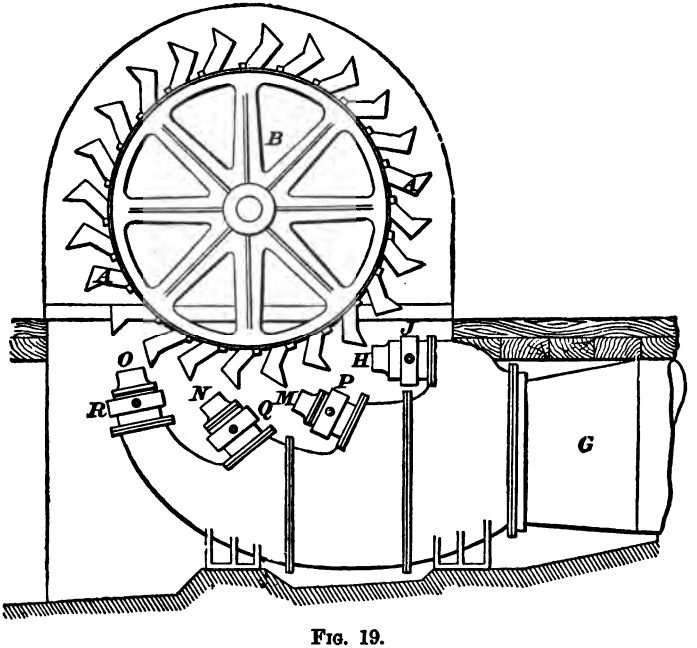

FIG. 19.

supplies of water. The streams having separate and distinct lines of impingement, do not conflict, and there is therefore no appreciable loss of efficiency. By this means the wheel can be arranged to almost any required power under heads ranging from 25 feet upwards.

One of the greatest advantages possessed by the Pelton

water-wheel is the facility with which wide variations of power can be produced without essentially impairing the efficiency. This can be accomplished in three ways, namely :—

By changing the size of nozzle tip or tips, and by that means varying the size of the stream or streams thrown on the wheel, the power of which can be varied from its maximum capacity down to one-fourth of the same without appreciable loss, thus adapting it to a full supply of water when obtain-

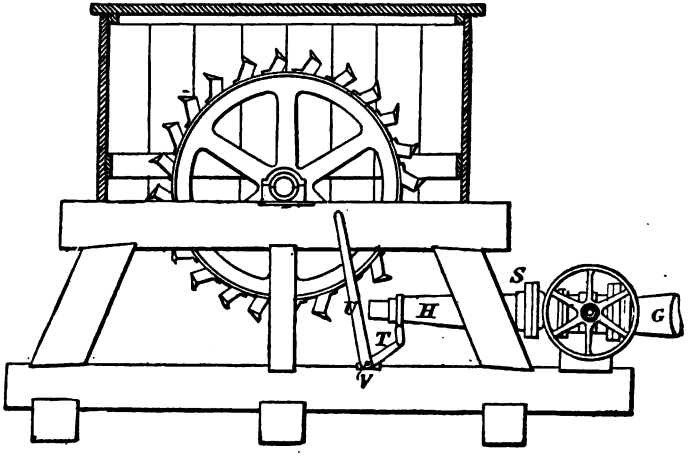

FIG. 20.

able, or to a reduced quantity when from any reason the supply fails in part.

The second method of varying the power of the wheel is illustrated in Fig. 20, which shows a 6-foot wheel fitted with deflecting nozzle. In this case, instead of the short nozzle H in Fig. 16 and Fig. 17, the nozzle is made from 3 feet to 5 feet in length ; it is attached to a ball-and-socket joint S, and raised or lowered by a bell-crank lever T U, working on a fulcrum at V. By this arrangement the

whole or any part of the stream can be thrown on or off the wheel instantly, thus affording such variations of speed and power as may be desired to accommodate any change in load or supply of water. The amount of water wasted is so small as not to be worth considering in most cases. This arrangement can be used for wheels having one or two nozzles.

Where great steadiness and even running is important, and the head is not sufficient to give the required power with a standard Pelton water-wheel of one stream, a wheel

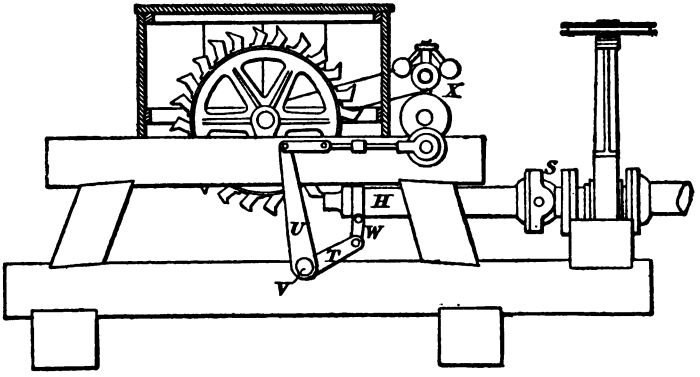

FIG. 21.

of larger diameter, that will allow of a larger stream, is to be recommended instead of using two, as the deflecting nozzle with governor attached can only be used with a single nozzle. A Pelton water-wheel, 3 feet diameter, fitted with a deflecting nozzle automatically actuated by a governor, is illustrated in Fig. 21. It consists, as in the last arrangement (Fig. 20), of a deflecting nozzle H, attached to a ball-and-socket joint S, and raised or lowered by bell-crank or L-lever T U, working on a fulcrum pin V. The end T of the lever is coupled to the nozzle H by the link W, and the

end U is coupled to a fly-ball governor X; the governor being driven by a belt from the water-wheel shaft C, hence, the raising and lowering of the nozzle is caused by the action of the governor X, therefore the wheel is kept at a regular and uniform speed under all conditions.

Hett's Patent Pelton Water-wheel.

The patent consists in an improved nozzle, by means of which the power of the wheel can be changed without raising or lowering the nozzle and the necessary ball-and-socket joint.

The arrangement of nozzle, when the regulation of the speed or adjustment is performed by a hand-wheel, is illustrated in sectional elevation Fig. 22, in which A is a casting provided with the inlet-branch, and bolted to the wheel casing C; B is the nozzle into which is fitted a plug or spear D, at the end of the screwed spindle E, the latter working in the gun-metal nut H, and actuated by means of the hand-wheel G. It will be clearly seen that by turning the hand-wheel G the spear is either pushed into the nozzle B, closing it, as shown in the illustration, or opened more or less according to the requirements.

The automatic nozzle is shown in sectional elevation, Fig. 23. It consists of the plug A and nozzle B, as in the previous case, but in this instance the spear A is actuated by means of the head waters acting on a piston in a hydraulic cylinder, the admission and discharge of water to and from the hydraulic cylinder being regulated by a high-speed centrifugal governor.

In the illustration A is the spear and B the nozzle, which are for regulating the flow of water for the revolving wheel. C is the hydraulic cylinder and D the piston, the latter being secured to the spear by means of a cone and nut. E is the piston valve, connected to the valve spindle F, and lever G, to the governor H. The governor is driven by a belt from the spindle of the motor. J is a passage for

admitting water under pressure from the main inlet. K and L are ports for admitting and allowing the escape of water to and from the hydraulic cylinder. M is the discharge passage.

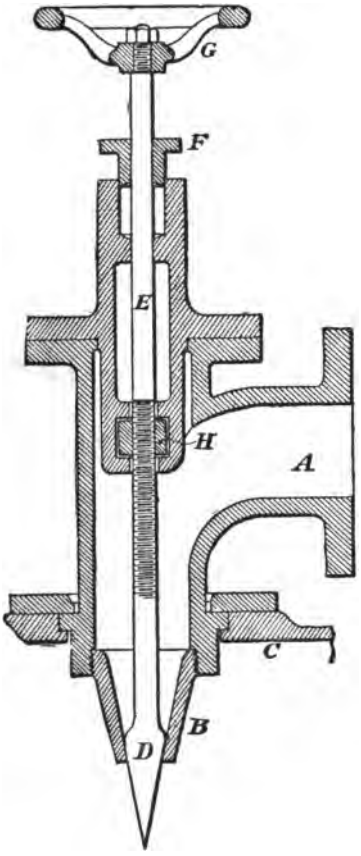

FIG. 22.

The action of this governing arrangement is as follows:

Assume the wheel to be running at its normal speed, the governor holds the valve E in the mid-position, as shown in the illustration, and the piston in the hydraulic cylinder is in equilibrium and stationary.

If the speed varies, the governor either rises or falls, moving the valve E, which admits water under pressure to one or the other side of the piston D, as the case may be, at the same time opens to the discharge-pipe and allows water on the opposite side of the piston to escape. The piston D and spear A move, and admit or cut off water to the motor until the normal speed is again obtained.

Two or more wheels may be used on the same shaft or spindle, where the head of water is too low to admit of getting the power desired from one wheel.

The speed of the periphery of the Pelton water-wheel should be one-half the speed of the issuing jet.

The area of the jet required will be found by the

Rule.—Divide the number of cubic feet of water available per minute by the velocity of the jet in feet per second, the result multiplied by 2·4; the product equals the area of jet required in square inches.

The velocity of the jet will be found from Table V., page 25.

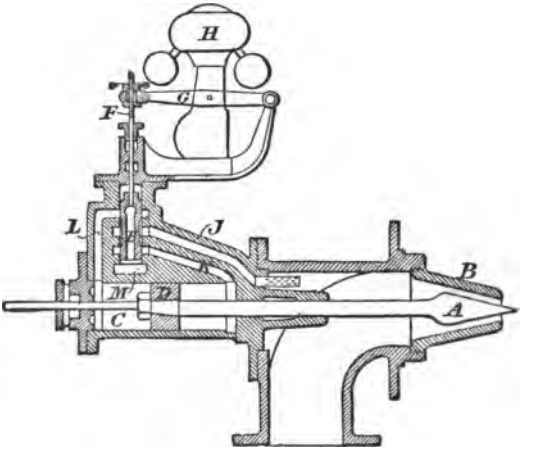

FIG. 23.

Example.—Required the area of jet in square inches for a Pelton water-wheel when 200 cubic feet of water is available per minute, and the height of fall is 50 feet. On referring to Table V., page 25, we find the velocity produced by a head of 50 feet equals 56·745 feet per second, therefore

$$\frac{200}{56 \cdot 745} = 3 \cdot 52,$$

and

$3 \cdot 52 \times 2 \cdot 4 = 8 \cdot 448$ square inches area of nozzle or jet.

TABLE VII.—This Table gives the Speed and Power of Three Sizes of Pelton Water-wheels, which have in practice developed an Efficiency of 80 per cent.

Head of water in feet.	Cubic feet per minute.										Diameter of wheel in inches.		
	10	20	30	40	50	60	70	80	90	100	24	48	72
	Horse-power.										Working revolutions per minute.		
20	·31	·62	·93	1·24	1·55	1·86	2 17	2·48	2·79	3·00	163	81	45
40	—	1·2	1·80	2·40	3·00	3·60	4·20	4·80	5·40	6 00	230	115	77
60	·904	1·9	2·71	3·61	4·52	5·41	6·32	7·23	8·13	9·04	282	141	94
80	1·20	2·4	3·60	4·80	6·00	7·20	8·40	9·60	10·8	12·0	328	160	109
100	1·60	3·2	4 80	6·40	8·00	9·60	11·2	12·8	14·4	16·0	364	182	121
150	2·40	4·8	7·20	9·60	12·0	14·4	16·8	19·2	21·6	24·0	446	223	149
200	3·20	6·4	9·60	12·8	16·0	19·2	22·4	25·6	28·8	32·0	514	257	171
250	4·00	8·0	12·0	16·0	20·0	24·0	28·0	32·0	36·0	40·0	576	288	192
300	4·80	9·6	14·4	19·2	24·0	28·8	33·6	38·4	43·2	48·0	631	315	210
360	5·80	11·6	17·4	23·2	29·0	34·8	40·6	46·4	52·2	58·0	691	345	230
400	6·40	12·8	19·2	25·6	32·0	38·4	44·8	51·2	57·6	64·0	728	364	243
460	7·50	15·0	22·5	30·0	37·5	45·0	52·5	60·0	67·5	75·0	781	390	260
500	8·00	16·0	24·0	32·0	40·0	48·0	56·0	64·0	72·0	80·0	814	407	271

Cadle's Patent Duplex Pelton Water-wheel.

In this wheel the buckets fit on the disc into recesses, which are cast there to receive them. They are held in position by a single bolt passing through opposite buckets. No strain due to the impact of the water comes upon the bolts; they simply serve to hold the buckets in their places, the strain being all taken by the lugs and ribs upon the disc into which the buckets fit.

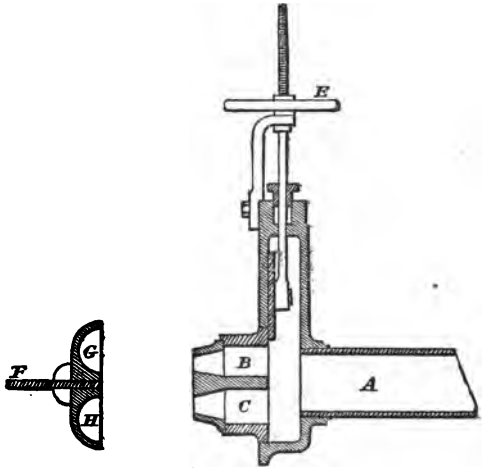

Fig. 23A.

Fig. 23A is a sectional plan through the sluice, nozzles, and buckets of one of the Cadle water-wheels, or jet water-wheel.

A is the main pressure pipe; B and C are the nozzles regulated by the slide D, by means of a hand-wheel E; F is the rim of the wheel, and G and H the buckets.

It will be noticed that the jets strike the bottom of the buckets, and turn the streams of water back to the direction from whence they came.

In this wheel the gate is made to open one side of the nozzles at a time, so that when only one-half of the power is required the gate is only drawn half open.

Both nozzles can be made the same, or of different size, and so with a single hand-wheel wide ranges can be had at the highest efficiency.

Cadle's Patent Quadruple Pelton Water-wheel.

In this wheel, illustrated in sectional elevation Fig. 23B, A is the main pressure-pipe; B and C are the double nozzle,

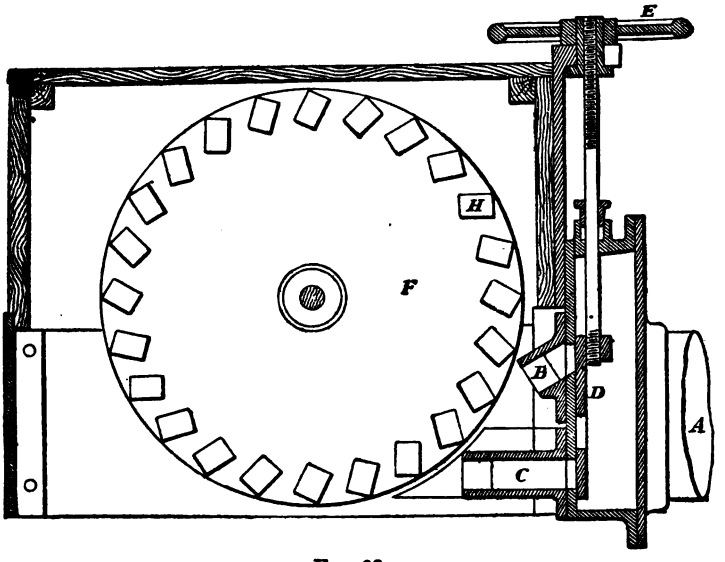

Fig. 23B.

one pair above the other. The same sluice or slide D controls all the nozzles, the sluice being so proportioned that

when it is opened it first uncovers the lower nozzles and a further movement opens the upper ones.

By this arrangement the power of the wheel is doubled, and when only half-power is wanted, only the lower nozzle is opened.

F is the disc of the wheel; H the buckets; E the hand-wheel for regulating the sluice.

CHAPTER VII.

GENERAL REMARKS ON WATER-WHEELS.

THE power can be transmitted from the water-wheel to the machinery to be driven by it in two ways:—When the wheel is made of wrought iron and the arms are light, incapable of resisting the turning action transmitted from the periphery of the wheel, a spur or bevel segment is bolted to one side of the shrouding, gearing into a pinion on the countershaft, the latter being placed so that the teeth in gear are on the line of the resultant of the weight of the water in the loaded arc of the water-wheel.

In the second case it consists in keying a spur-wheel or bevel-wheel on to the water-wheel shaft, which wheel gears into a pinion keyed on to a countershaft giving motion to the machinery. This latter method is adopted when the water-wheel is provided with rigid arms or spokes. It is obvious that in this manner of driving all the weight of the water exerted on the periphery of the water-wheel is transmitted through the arms of the wheel and axle.

The diameter of the water-wheel gudgeon may be found by the following

Rule.—If the axle is to be made of cast-iron, extract the square root out of the weight on the gudgeon in cwts., the result equals the diameter of the gudgeon in inches. If the axle is intended to be of wrought iron, take the square root out of the weight on the gudgeon in cwts., multiply the product by 0·86; the result equals the diameter of a wrought-iron gudgeon in inches.

If we require to find the effective thrust of the crank of an overshot water-wheel employed for pumping we must find the effective leverage, which is obtained by subtracting the length of the pump crank from the radius of the water-wheel, both in feet or inches, and dividing the remainder by 3. The friction will be found by dividing the number of buckets by 3; multiply the product by the weight of the water in each bucket, in pounds; multiply the result by the leverage; and divide the total by 5. The effective thrust in lbs. can then be found by dividing the number of buckets by 3; multiplying the product by the weight in each bucket in pounds; multiply the result by the effective leverage; from the product subtract the friction; the result will give the effective thrust in pounds.

The water in the mill-race should not have a less speed than 1 to 1½ feet per second in order to prevent deposit and growth of weeds.

The arrangement for admitting the water on to the water-wheel is of great importance. It is accomplished in various ways. The best plan is to have two sluices or penstocks, one for admitting the full amount of water, the second for regulating the amount necessary. In either case, if one or two are used there should always be a grating or strainer in the front of the first, to prevent rubbish from being admitted to the wheel. Now, for instance, if we take a Poncelet water-wheel, actuated by a supply of water which varies greatly in its level, it is by far the best plan to allow the water to escape from the mill-race beneath the sluice as illustrated in Fig. 24, in which A is the water-level in the head-race; B the level of water in the tail-race; and C the sluice or penstock. In such cases the wheel is called an impulse or mixed breast-wheel, because the velocity of the water flowing under the sluice acquires a greater velocity due to the head of water from the top edge of the sluice opening D, to the water-level A, in the head-race, which also increases the velocity of the wheel. The sluice C is in this case secured

at an incline, as near the wheel as possible; the sluice itself is made of wood, sliding up and down in the cast-iron guides E, secured to the masonry, and rests at the bottom against a cast-iron apron F. The apron and stone arcs must be made perfectly even, so as to almost fit the wheel; the more perfect the workmanship the less water lost, consequently a greater efficiency of the water-wheel.

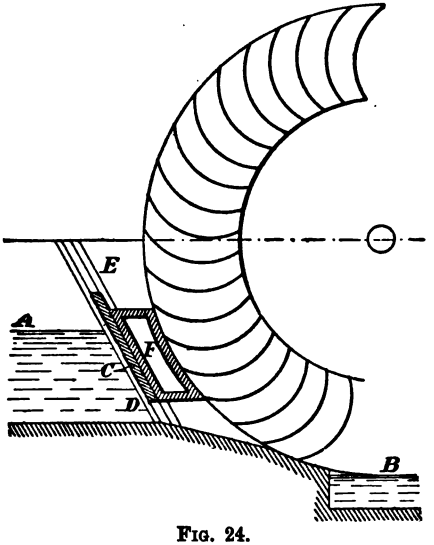

FIG. 24.

The sluice for Poncelet water-wheels is always fixed at an angle from 40° to 60° incline to the horizontal line. This is illustrated in Fig. 24, where A is the head-race water-level, and B the tail-race water-level; and C the inclined sluice.

The thickness of the stream of water flowing on to an overshot or high-breast water-wheel should not exceed 7 inches, hence these wheels are not suitable where the varia-

tion of the water-level in the head-race is great, especially when an ordinary sluice is used. In such cases the sluice illustrated in Fig. 15, p. 38, is most suitable, the opening being shown at D.

Fig. 25 illustrates the ordinary sluice arrangement adopted for overshot water-wheels. In this A is the water-level in the head-race; C the sluice; D a cast-iron apron reaching nearly to the perpendicular centre line of the wheel. It will be easily seen that if the water-level should rise the water would flow over the buckets and be wasted. The high

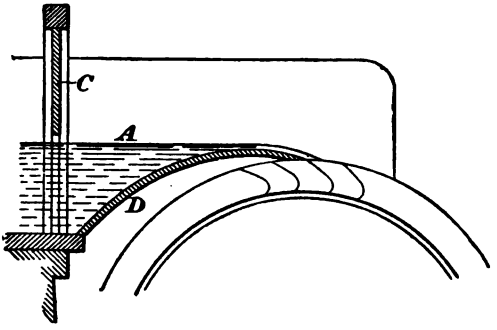

FIG. 25.

water-level in the tail-race should never reach the periphery of the wheel, as it would cause resistance to the overshot water-wheel, but in the case of high-breast water-wheels it has more of a tendency to increase the power of the wheel if it does not rise half the depth of the shrouding.

A sluice of very good construction for breast water-wheels is shown in Fig. 26. It has two slides C and D, and three apertures E, F, and G, in the apron, suitable for the three head water-levels H, J, and K. L, M, and N are the corresponding water-levels in the tail-race. The slides are arranged to open separately to suit the different water-levels in the head-race.

Another arrangement for admitting the water on to a high-breast water-wheel is shown in sectional elevation

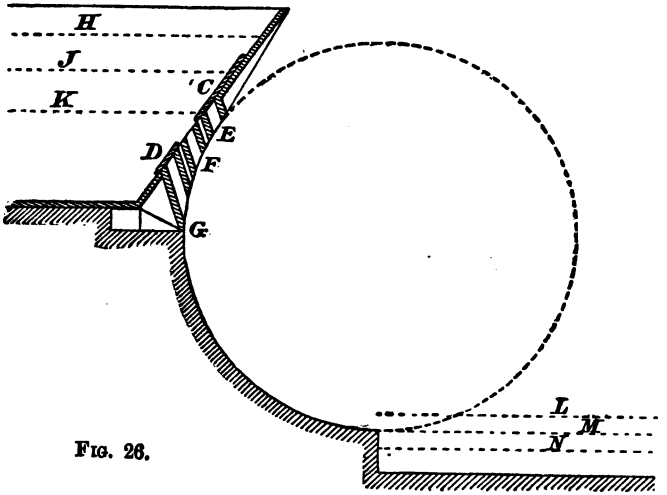

FIG. 26.

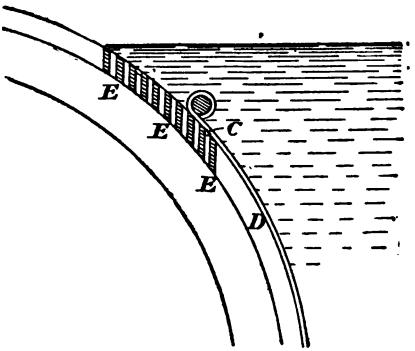

FIG. 27.

Fig. 27. It consists of a cast-iron apron D, furnished with lots or openings E, E, E; these openings are covered by a

roll of leather C, over which the water passes at different heights with the same velocity.

In some cases, for breast water-wheels, the sluice is opened by being lowered to allow the water to run over it; this plan has been adopted by A. M. Sagebien. This does not appear to be a very good plan, especially if there is a pit in the front of the sluice, as shown in Fig. 28, at D, because stones and rubbish must collect in the pit and eventually prevent the sluice C from being lowered, although it can certainly be partly prevented by having a grating placed in the front of it. However, it has the advantage of preventing the rubbish from getting between the buckets and apron; C is the moveable slide; E is a cast-iron apron.

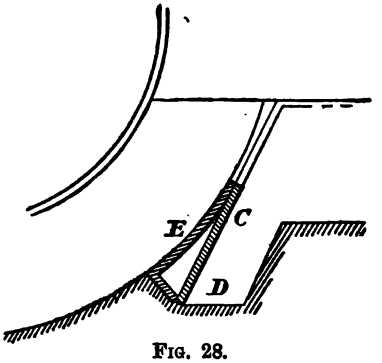

FIG. 28.

Another arrangement in which the water may be admitted on the overshot water-wheel is shown in Fig. 15, page 38. In this case the water is conducted to the proper place for being admitted on to the wheel and through an opening D; by this arrangement the water will drop on to the wheel in the head-race, hence a deviation of the water-level in the head-race does not so much affect the action of the wheel as the ordinary method, previously described and illustrated by Fig. 25, page 57.

Water-wheels were originally made of bamboo canes, as has already been mentioned in the introduction; after that they were made of wood, next of cast iron, and at the present time mostly of wrought iron and steel.

A section of a shrouding and body of cast iron is given

in Fig. 29 and Fig. 30. A is the shrouding, which consists of two, or sometimes, in very wide wheels, of three or more

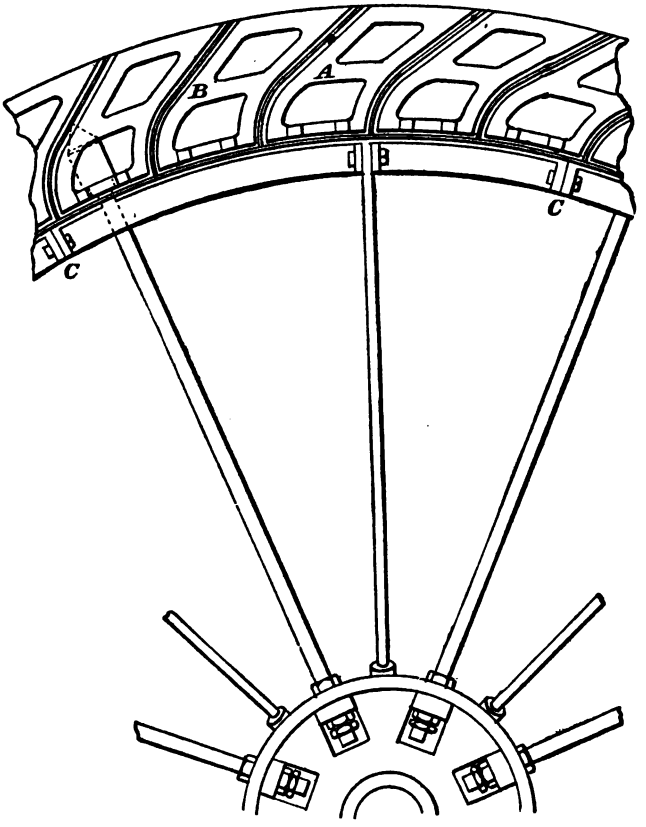

FIG. 29.

parts, the centre ones being simply plain rings D; B are grooves or slots formed in the inside of each shrouding,

into which are secured the buckets. At other times angle-irons are secured to the buckets, these being riveted or bolted to the shroudings. The shroudings in this case are cast in eight segments, bolted together as shown at C,

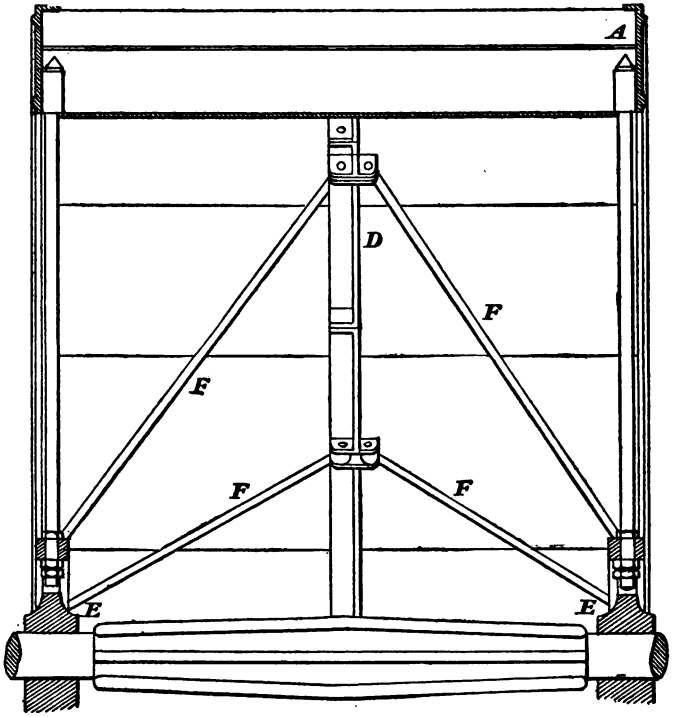

FIG. 30.

Fig. 29, each segment containing five buckets. The arms consist of eight straight bolts, one in each segment, also eight diagonal stay bolts F, on each side, secured at the centre to the outside bosses E, E, and the outer ends are

secured to the centre ring D ; the centre ring being provided with lugs, between which the stay or tie-bolts are inserted.

A section of a wrought-iron water-wheel is illustrated in Fig. 31, in which A are the arms, formed of ⊥-iron. The shrouding B is made of wrought iron and single-riveted butt-straps, and the two shroudings are tied together by bolts passing through the whole width of the wheel. These bolts are fitted with nuts on each side of each shrouding. The buckets are bolted to the shrouding by angle-irons. Against one of the shroudings is bolted a cast-iron spur-wheel C, provided in segments, and bolted to it by the bolts D D; E is the water-wheel body or sole-plate, made of wrought-iron plates, the shrouding being secured to the body by angle-irons. To prevent transverse warping of the wheel it is braced by oblique wrought-iron tie-rods.

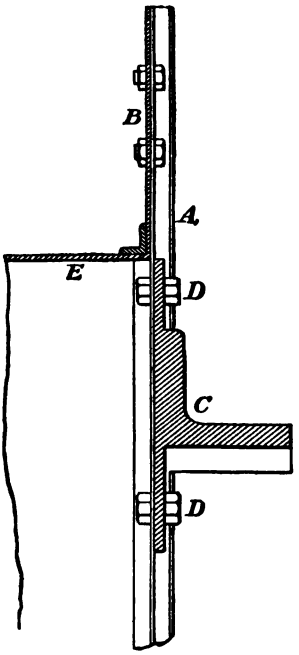

FIG. 31.

If the wheel is very wide the buckets are stayed by bolts, as shown at A, Fig. 33, to give them the necessary rigidity; these are plain bolts on which are secured ferrules B, made of cast iron or cast malleable iron. The bolts pass through each contiguous pair of buckets, and are secured by nuts and lock-nuts.

Sometimes the arms consist of flat iron bars A, Fig. 32,

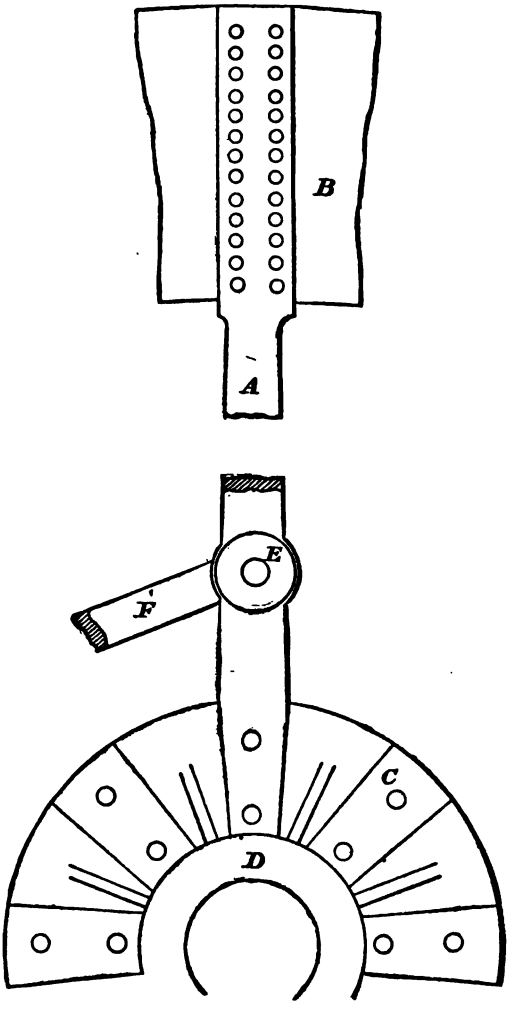

FIG. 32.

riveted to the shrouding B, and bolted into slots in recesses C, provided for the purpose in the centre or boss D. About midway between the shrouding and the boss is formed a swell or boss E, on the arms and stays; or ties F are bolted between the bosses E.

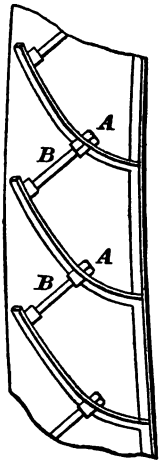

FIG. 33.

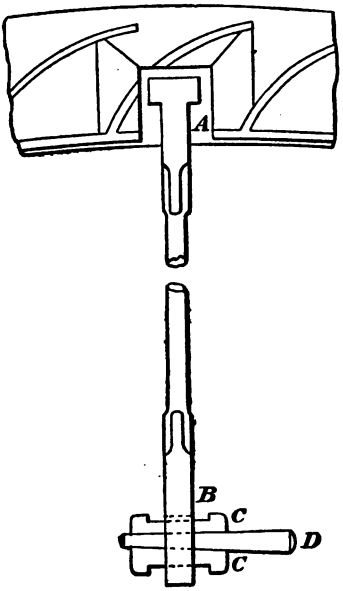

FIG. 34.

When cast-iron shrouding is employed the arms or spokes are sometimes cottered into bosses provided on both centre bosses and shrouding; and at other times the arms are provided with T-heads, which are secured into recesses in the shrouding, as shown at A, Fig. 34, and secured to the centre boss at B by means of two gibs C and a cotter B

CHAPTER VIII.

TURBINES.

A TURBINE is a water-wheel with an axis which may be vertical, horizontal, or inclined at any angle, to suit circumstances, and consists of two metal rings having buckets placed between them, which buckets are so constructed as to receive the whole power from the water, and discharge it with as little disturbance as possible.

The real difference between an ordinary water-wheel and a turbine consists in that a turbine takes its supply of water at the bottom of the fall, the water-wheel at the top or beginning of the fall; therefore the turbine obtains nearly the whole of the pressure due to the head or height of the fall. In some cases, however, the turbine is placed some distance from the bottom of the fall, in such cases the pressure will be reduced only by the amount of head required to overcome the friction of the water. A turbine has also the property that it can run either above the tail-water or immersed in it, without any perceptible alteration in their useful effect.

The advantages possessed by the turbines over the ordinary water-wheels consist in:—

1. Most turbines work without material loss of efficiency even when drowned.

2. Turbines move with a greater velocity than the common water-wheel, hence reduced size and weight of these machines, compared with equal power water-wheels.

3. They can be applied to falls from about nine up to hundreds of feet; in the latter case it would be impossible to employ common water-wheels.

Classification.

Turbines are classified in two ways. In one way they are divided into two main classes, namely:—

Impulse turbines, and reaction turbines.

Impulse turbines are those in which the water acts only by its impulse; and the second, the reaction or pressure turbines, are those in which the water acts partly by impulse and partly by pressure.

Impulse turbines are nearly entirely filled with water. To ensure this they must always be placed above the tail-race, so as to get clear of the water freely.

Reaction or pressure turbines. In these, the pressure is greater at the inlet than at the outlet ends of the wheel passages; hence the passages must be entirely filled with water, and the wheel may be placed below the tail-water in the race if so desired. Many designs of reaction turbines may be fixed at any height, not exceeding 30 feet above the tail-race; they discharge the water into an air-tight suction-pipe; this tube or pipe is usually made parallel, but in practice it has been found to work better when it is enlarged at the bottom end, which must always be under the surface of the water in the tail-race. The weight of the column of water in the pipe is balanced by the atmospheric pressure and produces the flow through the turbine, just as if the turbine was placed at the bottom of the fall. The great advantage of this tube or pipe is, the turbine being placed above the tail-water is easy accessible.

The second mode adopted in classifying turbines divides them into five classes, namely:—

1. Outward-flow turbines.
2. Inward-flow turbines.

3. Mixed-flow turbines.
4. Parallel-flow turbines; and
5. Circumferential-flow turbines.

Outward-flow turbines are those in which the water is directed by the guide-blades upon the inner circumference of the wheel and escapes at the exterior circumference, into the wheel-pit or waste-pipe.

The conditions in the inward-flow turbines are reverse to the outward-flow, the water in the former flows from the guide-blades and impinges upon the outer part of the bucket, escaping through the wheel to the inner periphery and then passes into the tail-race.

The water in the parallel-flow turbines flows through the guide-blades into the wheel, and is discharged therefrom in a direction parallel to its course of entrance; the action of the water being also parallel to the axis of the wheel, whilst in other turbines the discharge is at right angles to the same.

The mixed-flow turbines are a combination of the inward-flow and parallel-flow turbines. The water enters from the exterior circumference and then turns parallel to the axis and escapes to the tail-race.

The action and general combination in the circumferential-flow turbines combines the action of those already described. The water is directed upon the circumference of the wheel in the direction of its rotation, and is discharged sideways and parallel to the axis of rotation.

Sometimes two turbines of the same construction are made to actuate the same axle, so that one turbine balances the other, hence, diminishing the friction on the journal; this combination is usually termed twin turbines.

If one turbine is fixed above the other so that the water after having acted upon one turbine wheel is allowed to pass through a second one on the same spindle, the combination is called a compound turbine. The object of the last arrangement is to diminish the speed of rotation.

We will now proceed with a description of some of the turbines most used, and give simple rules for calculating the principal parts and the methods adopted in constructing the guides or buckets in the wheel and the guide-blades, in the simplest possible manner, commencing with the outward-flow turbines.

CHAPTER IX.

OUTWARD-FLOW TURBINES.

Barker's Mill.

The original outward-flow turbine is the old contrivance called the Barker's mill, invented by Dr. Barker; it consists, as shown in illustration Fig. 35 and Fig. 36, of an upright pipe A, closed at the bottom and at the top provided with a

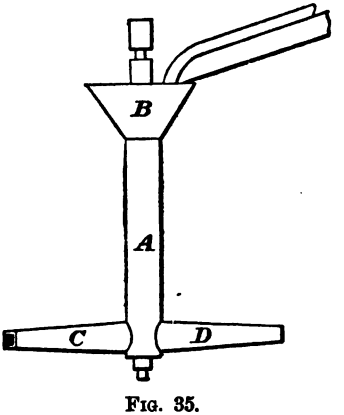

Fig. 35.

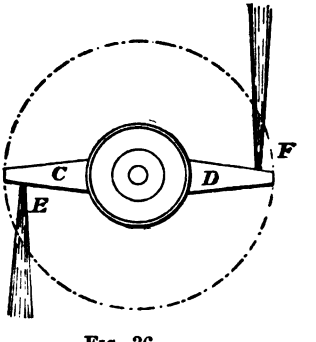

Fig. 36.

funnel B. At the lower end of the pipe A are provided two arms or pipes C and D, placed opposite one another, at right angles to the upright pipe, and closed at their outer ends. Near the outer end of the pipes C and D, and on one side, is

a small aperture provided at E and F, the holes, as will be seen, are opposite each other. The upright A is mounted on a spindle and always kept full of water. The principle of the action is the same as in Hero's steam engine, water in the turbine being used instead of the steam in Hero's engine.

The discharge of water from the holes in the arms being on the opposite sides causes them to revolve together with the upright pipe A, and the spindle with a velocity nearly equal to that due to the head of the fall, and with pressure due to the same height, and to the area of the opening in the arms. To best explain the action the author can do no better than to copy the illustration Fig. 37, and description given by Mr. C. Slagg in his valuable little book 'Water Engineering.'

"The fundamental principle of the reaction turbine wheel is the release of pressure in the opposite direction with a pressure equal to that taken away. Fluid pressure acts in opposite directions at the same time, with equal intensity in both directions, and when the resistances are less than its pressure, it also moves in opposite directions at the same time, the velocity in either direction being inversely as the resistance; and if the abstraction of the quantity of water, due to the motion in one or both directions, be replenished at the head, the motion will be continued under the same head.

"If the vertical pipe or chamber A, in Fig. 37, communicate with the head-water, and an arm, or two or more arms, project from it; or if passages be made between it and a revolving wheel round it, one of the cells or buckets of which may be represented by the two opposite vanes B C and D E, with the closed end C D, the water presses with equal force on the two sides, they being of equal area, and there is no motion. Neither would there be any motion if the ends were closed between C and *g*, instead of between C and D, for the pressure upon the end C *g* in the direction of the tangents

at every point between the two vanes is equal to the pressure upon D *g* only; and pressures would equally be balanced whatever form, whether straight or curved, be given to the vanes C *g* E. But if an opening be made in one side as from C to *f*, that side of the cell would be relieved of the amount of pressure due to the area of the opening, the pressure

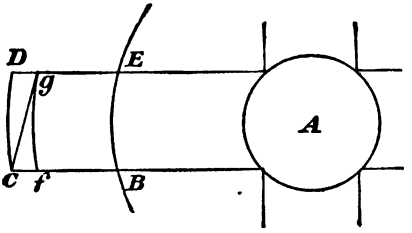

FIG. 37.

which it had before being now transferred to the issuing water, forcing it out with the velocity due to the head, and the obstructions to its flow."

M. MATHON DE LA COUR'S OUTWARD-FLOW TURBINE.

This gentleman proposed a modification of Barker's mill, in which the drive pipe was brought down from the head or top of the fall, and bent at its lower end upwards; on the top of this pipe he proposed to fit two arms, similar to those in the Barker's mill, which arms were to work on an upright spindle, the joint between the pipe and arms arranged so as to allow of a free circular motion without any loss of water. This plan allowed the use of a higher fall. One objection to the Barker's mill was the great friction on the bottom of the centre spindle, and one objection to M. de la Cour's turbine was the great upward pressure, when working under heavy pressures.

Whitelaw's Outward-flow Turbine.

Mr. Whitelaw constructed an outward-flow reaction turbine, which was an improvement upon Barker's mill and De la Cour's turbine. He allowed the water to enter underneath, like the one proposed by the latter gentleman, but instead of having the arms C and D straight, as in Fig. 36, p. 69, he made them curved all the way, the curvature being that of an Archimedean spiral, finishing at a tangent to the periphery of the wheel. The method

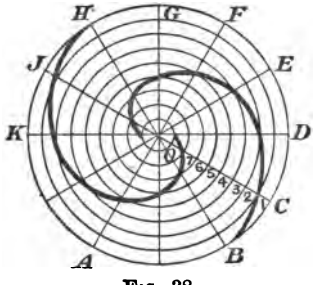

Fig. 38.

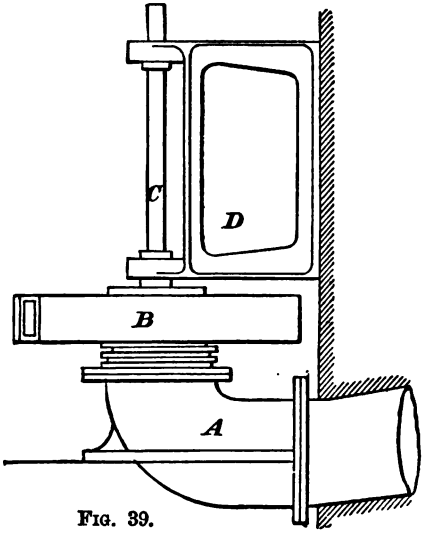

Fig. 39.

adopted in striking the spiral curve is illustrated in Fig. 38. Draw a circle A equal to the diameter of the wheel, divide

the circumference of the circle into 12 equal parts, draw the radii B, C, D, E, &c.; divide the radius B O into 9 equal parts and draw the circles 1, 2, 3, 4, &c. Then the curve of the centre of the arm will pass through the points B, C 2, D 3, E 4, F 5, G 6, H 7, J 8, K 9, and O. The depth of the arms is the same at every point, but the width is greatest at the centre and gradually reduced towards the periphery, having a rectangular section all the way. This turbine is shown in elevation, Fig. 39, in which A is the drive or pressure pipe; B the revolving wheel and arms; C the upright spindle; and D the bracket for carrying the spindle C.

M. Redtenbacher's Outward-flow Turbine.

This turbine was designed to prevent the tendency of a downward pressure in Barker's mill, and the upward pressure in Whitelaw's turbine, especially when working under heavy pressures or high falls. It consists, as will be seen from the illustration, Fig. 40, of the drive-pipe A, and two revolving wheels or sets of arms B and C, one on each side of the drive-pipe A, the latter at the other end being shaped like the letter T; by this means an equal pressure is acting in opposite directions, hence neutralising each other.

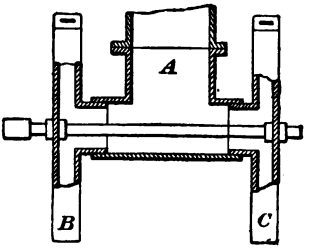

Fig. 40.

M. Fourneyron's Outward-flow Turbine.

This turbine might be considered as the first practical one, and was awarded a prize by the French Government. It is shown in sectional elevation, Fig. 41; and plan, Fig. 42, showing the construction of the curves for the guide-blades

and buckets or vanes in the revolving wheel. It consists of a revolving wheel A, in the centre of which the water enters through the pressure-pipe B, hence this turbine comes into the class outward-flow turbines, besides being one of the reaction type. C are the buckets or vanes through which the water passes as it diverges from the centre in every direction, and escapes at the periphery of the revolving wheel A, which latter is keyed on to the upright spindle D. The spindle is passed through a tube cast in the centre of the pressure pipe, and on the top of the spindle is keyed the

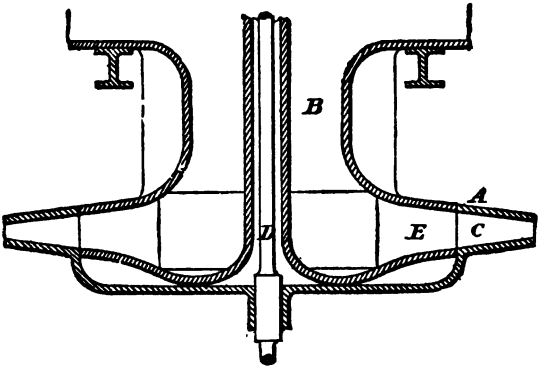

FIG. 41.

gearing for driving the machinery. The force exerted by the water on the buckets C is equal to the height of the fall and is directed into the buckets by the guide-blades E. The manner in which the supply of water is regulated will be explained further on.

Fig. 42 shows one-quarter of the plan illustrating the method adopted in delineating the curves for the guide-blades and buckets in the wheel. First draw the circle A B, with a radius equal to the outside diameter of the turbine wheel; next the circle C D equal to the radius of

the inside diameter of the wheel; then the circle E F, making the distance C E equal to C A. Draw the perpendicular B G, and the horizontal line A G at right angles to one another. Divide the circle A B into as many parts as there are buckets, and the circle C D into as many parts as there are guide-blades. Mark off G H on the line G A equal to tangent of 20 degrees on the same scale that G B equal the radius, that is, G H equals 0·364 of G D. From the point

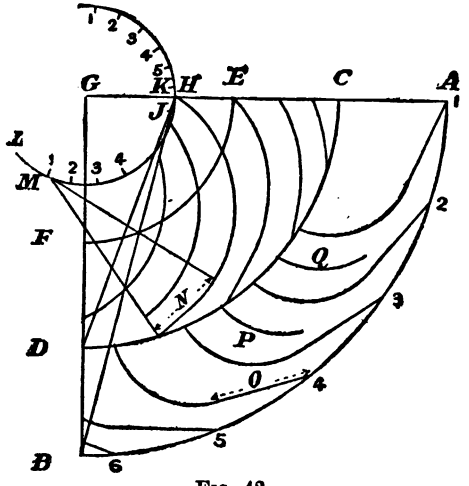

FIG. 42.

H draw the lines H D and H B, and from D and B mark off D J and B K respectively equal to D G and B G, the inside and outside radii of the wheel. Through J and K draw two circles J L and K M. On these circles will be found the centres of guide-blades and buckets respectively for a distance, which in the guide is equal to N on the circle C D, and in the bucket equal O, N being the distance between the guide-blades on the circle C D, and O the distance between the buckets on the circle A B. The other parts of the guide-

blades may be struck with a radius one-half of G D, and the remainder of the buckets with a radius equal to three-fourths of B D. P and Q are short buckets introduced to fill up the space on the receiving or inner side of the wheel on the circle C D. The remainder of the guide-blades and buckets are drawn in a similar manner, the centres being found on the circles J L and K M.

Another arrangement of a Fourneyron's reaction turbine is illustrated in sectional elevation, Fig. 43. In this the spindle E is resting on a foot-step F secured to the masonry. A lever G regulates the height of the spindle E, so as to take up any wear that might take place in the foot-step bush on bottom end of the spindle, and hence keep the turned parts of the turbine wheel and casing always in contact. The vertical spindle revolves in the pipe H, which is carried by a boss J in the centre of the part B of the turbine. The pipe H is steadied and kept central by K, and three or more horizontal tie-bolts L. The cylinder in this instance consists of two concentric tubes, the upper one C, being fixed, the lower one B, sliding within C, and is raised or lowered by the rods D. The lower tube B acts as a regulating sluice, about which more will be said further on. The vanes or buckets in this case are divided into three rows horizontally by two partitions; the advantage of this is to fill the passages according to the level of the water in the penstock.

The horse-power of a Whitelaw turbine may be found by the following

Rule.—Multiply the available quantity of water flowing through the arms in cubic feet per minute by the height of the fall in feet, and divide the product by 700.

Example. — Wanted the horse-power given off by 800 cubic feet of water per minute, with a fall of 20 feet.

Then

$$\frac{800 \times 20}{700} = 22{\cdot}5 \text{ horse-power, say 22 horse-power.}$$

Rule.—For finding the width of each discharge orifice in feet, multiply the number of horse-powers by 135 and

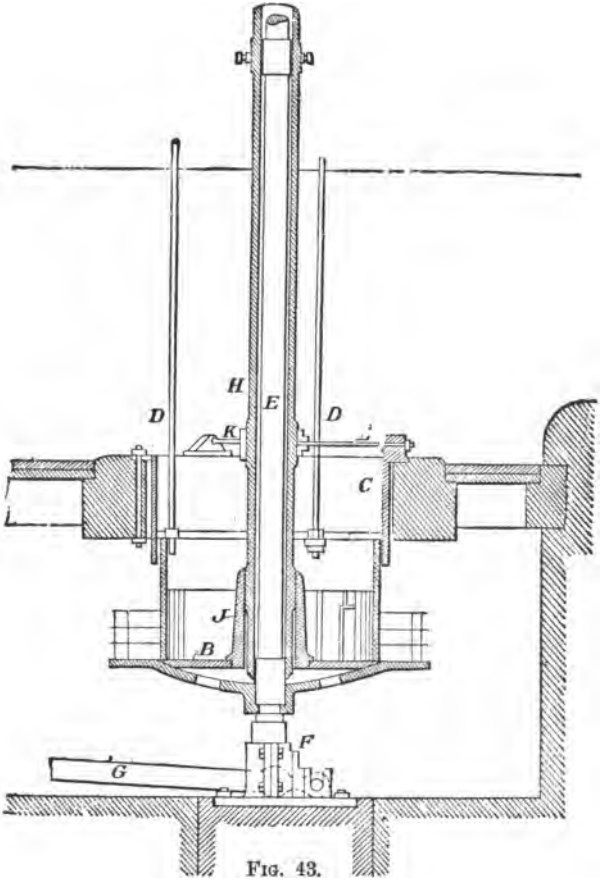

FIG. 43.

divide the product by the height of fall multiplied by 1000 multiplied by the square root out of the height of fall.

Taking the previous *example*, we get

$$\frac{135 \times 22}{1000 \times 20 \times \sqrt{20}} = \frac{135 \times 22}{1000 \times 20 \times 4{\cdot}47} = 0{\cdot}033 \text{ foot} =$$

$0{\cdot}396$ inch $= \frac{3}{8}$ of an inch full.

The diameter of the wheel will be found by multiplying the width of discharge opening by 50, hence in the previous *example*,

$0{\cdot}033 \times 50 = 1{\cdot}65$ foot $= 1$ foot $7\frac{1}{8}$ inches.

The central opening is found by multiplying the width of the discharge opening by 10, hence, using the same *example*,

$0{\cdot}033 \times 10 = 0{\cdot}33$ foot $= 3{\cdot}96$ inches, say 4 inches diameter.

To find the width of each arm:—Multiply the width of the discharge opening by 4, hence

$0{\cdot}033 \times 4 = 0{\cdot}132$ foot $= 1{\cdot}584$ inch, say $1\frac{9}{16}$ inch.

The number of revolutions per minute of the wheel is obtained by multiplying the square root of the height of fall in feet by 149·44 and dividing the result by the diameter of the wheel in feet. If we take the *example*, as before, we get

$$\frac{149{\cdot}44 \times \sqrt{20}}{1{\cdot}65} = \frac{149{\cdot}44 \times 4{\cdot}47}{1{\cdot}65} = 404{\cdot}8,$$

say 400 revolutions per minute.

Required the interior diameter of a Fourneyron turbine the following *rule* should be used:—

Divide the quantity of water in cubic feet per second by the cube root out of the height of the fall in feet, extract the square root out of the product, and add to the result 0·1.

Example.—Required the internal diameter of a Fourneyron turbine wheel for a height of fall of 40 feet, with an available quantity of water equal to 50 cubic feet per second.

Then we get

$$\sqrt{\frac{50}{\sqrt[3]{40}}} + 0{\cdot}1 = \sqrt{\frac{50}{3{\cdot}41}} + 0{\cdot}1 = \sqrt{14{\cdot}66} + 0{\cdot}1 =$$

$3{\cdot}828 + 0{\cdot}1 = 3{\cdot}928$, say 4 feet internal diameter of the wheel.

The width of the buckets in the wheel will be found by multiplying the internal diameter of the wheel in feet by 55, and dividing by the number of buckets in the wheel.

Example.—Wheel 3·923 internal diameter, 38 buckets, then

$$\frac{55 \times 3{\cdot}928}{38} = 5{\cdot}7 \text{ inches, say } 5\tfrac{3}{4} \text{ inches.}$$

To find the number of buckets, multiply the internal diameter of the wheel in feet by 3 and add 28; hence, in previous *example*,

$$3{\cdot}928 \times 3 + 28 = 39{\cdot}784, \text{ say } 39 \text{ buckets.}$$

The *rule* recommended by Mr. Cullen for calculating the proper working speed of the inner circumference for a Fourneyron turbine wheel of this description is:—Multiply the square root out of the height of fall in feet by 4·4 for turbines working under falls not exceeding 38 feet.

For falls above 38 feet, multiply the cube root out of the height of fall by 8·1; then in the previous *example* we get

$8{\cdot}1 \sqrt[3]{40} = 8{\cdot}1 \times 3{\cdot}42 = 27{\cdot}702$ feet per second, or 1662·12 feet per minute.

To find the area of the sum of the orifices in square feet, divide the quantity of water in cubic feet per second by the velocity of the periphery of the turbine in feet per second; as before,

$$\frac{50}{27{\cdot}61} = 1{\cdot}81 \text{ foot} = 1 \text{ foot } 9\tfrac{3}{4} \text{ inches nearly.}$$

The sectional area of the supply pipe in square inches, will be found by multiplying the quantity of water in cubic feet per second by 0·4, hence

$$50 \times 0{\cdot}4 = 20 \text{ square inches.}$$

The number of guide-blades equals the number of buckets if the latter are less than 24 in number; but if there are more than 24 buckets the number of guide-blades will be found by dividing the number of buckets by 3.

The quantity of water required in cubic feet per second for a turbine of a given horse-power and height of fall, is obtained by dividing the number of horse-powers by the height of the fall in feet and multiplying the remainder by 12·67.

The horse-power is found by multiplying the quantity of water in cubic feet per second by the height of the fall in feet, and by 0·079.

CHAPTER X.

INWARD-FLOW TURBINES.

In the inward-flow turbines, the water enters at the outer circumference of the wheel at the greatest velocity, and is discharged at the centre, where the speed is least, hence reducing the shocks at the entrance of the water. This turbine is the reverse to Fourneyron's, inasmuch that the guide-wheel surrounds the revolving wheel, and after the water has passed the buckets it is gradually deflected downwards by the curved under side of the revolving wheel. The centre tube or suction tube used in some of the inward-flow turbines are a great advantage, as by that means the turbine-wheels can be placed at any height above the tail-water level without diminishing the useful effect of the machine. This, of course, renders the wheel more accessible, and reduces the length of the driving spindle.

An inward-flow turbine is illustrated in Fig. 44. A is the turbine-wheel, keyed on to the centre spindle B, carried in a foot step C, secured to the brackets D. E are the buckets in the revolving wheel A. The water enters through the guide-blades F, passes through the wheel buckets E, down the suction-tube G, into the tail-race H. J is the reservoir or head-race; K is the circular sluice-gate. It will be seen from the illustration that the under side of the turbine wheel A is curved, so as to give the water, as soon as it has passed through the buckets E, a vertical direction. The top plate L, of the revolving wheel A, sustains the pressure of the water above it in the reservoir;

it is joined at several places to the wheel A, and is fitted with a stuffing-box round the shaft or spindle B. The bottom end of the suction-tube G, should always be under the surface of the water in the tail-race, and the best results are obtained when the bottom end of the circular sluice-gate K is bell-mouthed. The height from the top side of the buckets E in the revolving wheel A, to the under side of the sluice-gate K, must not exceed 30 feet.

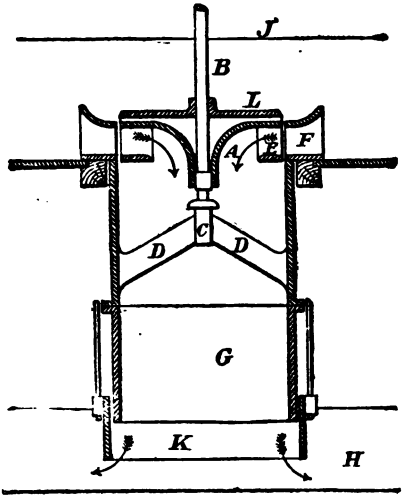

FIG. 44.

The vanes for inward-flow turbines are partly involutes of a circle, to lessen the contraction of the stream as it flows through the passages. In Fig. 45, A is the external circumference of the guide apparatus, and B the internal circumference; draw the perpendicular C D. Make the angle C B E 15°, and draw the line C E at right angles to B E, then describe a circle with C as centre, through the point

E. Let B F be the inner pitch of buckets, and suppose a thread wound round the circle E, and carrying a pencil at B; as this is unwound, the arc B G H is traced by the point B, the point H being a little to the left of the line J F G, and the width of the passage being, therefore, uniform from G to H. The remainder of the bucket H A, is a portion of a circle, the tangents A D and A K containing the angle 87·5°. The buckets in the revolving wheel are constructed

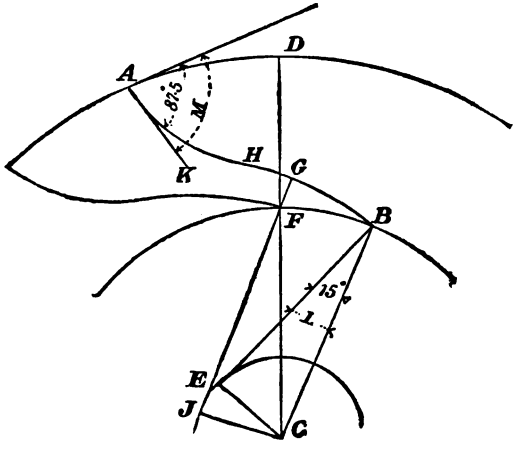

FIG. 45.

in the same fashion, except that the angle L is made 12° instead of 15°, and the angle M, instead of 87·5°, should be made an angle of 90°.

THOMSON'S TURBINE.

Professor Thomson's high-pressure VORTEX turbine is shown in sectional elevation, Fig. 46. A is the turbine-wheel securely keyed on to the upright spindle B, on which

the driving gear is secured at the top end. The wheel A revolves in a cast-iron casing or wheel chamber C. The supply chamber or *vortex* chamber is shown at D, and E is the supply pipe which leads direct from the source or fall. The water is admitted from the supply chamber to the re-

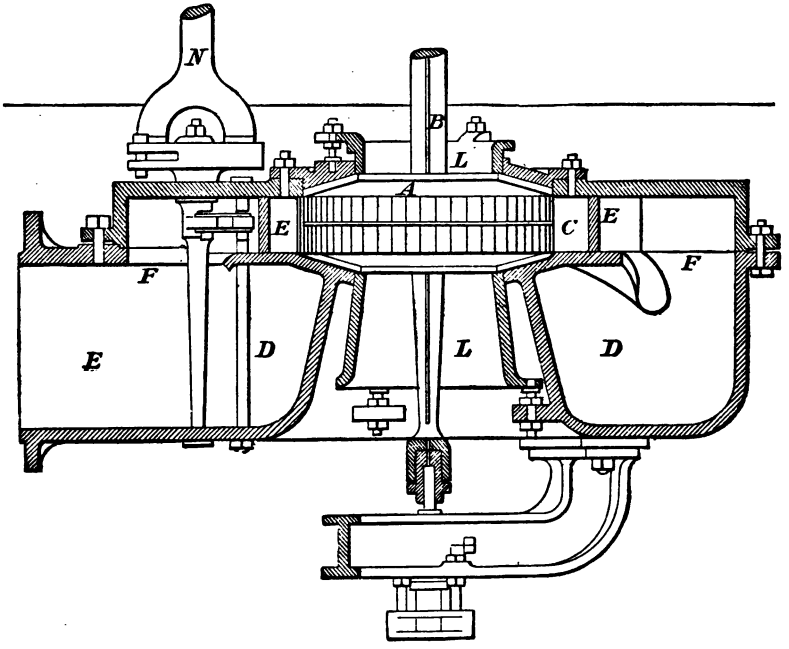

FIG. 46.

volving wheel A, through four or more openings F, according to the diameter of the wheel. The guide-blades E are four or more in number according to the number of openings, which blades are so arranged as to guide the water tangentially into the buckets in the wheel A. The guide-blades and curves of the buckets are constructed in the same

manner as previously described for inward-flow turbines. The water, as it flows out of the wheel A, passes out of the turbine through the two pipes L and L, one on the top the other on the bottom side of the casing, from whence it passes away down the tail-race, the turbine being fixed in the tail-race. The means employed for varying the power of Mr. Thomson's turbine, consists in that the guide-blades are made movable by a spindle N, which is coupled to the guide-blade pivots by levers and connecting-links, the spindle N being placed at any convenient position so as to be easy accessible. The water in these turbines is admitted through the pipe E into the chamber D tangentially, and in that manner receives a rapid rotary motion which it retains as it passes towards the centre where it is allowed to run to waste.

Fig. 47 illustrates a *vortex* turbine for low pressures. In this case, as before, A is the revolving wheel, B the spindle, which is resting, at its lower end, in a foot-step F; C is the chamber in which the wheel A revolves; D is the *vortex* chamber, which is supplied with water from the reservoir or head-race G. This turbine case is made of wood and consists of two tanks H and J, one inside the other, the wheel chamber and guide-blade chamber being placed in the space between the two tanks H and J. The water in the reservoir or head-race flows into the tank D formed by the annular space between the two tanks, from thence it passes through the guide-blades and the revolving wheel, and passes away into the tail-race through the two central openings L and M. The water escaping from M passes through boxes O and channel P into the tail-race. The wheel in this case, as in the previous one, is totally submerged in the tail-race, and the regulating arrangement is similar to that in the high-pressure turbine. Professor Thomson said, that "by the balancing of the contrary fluid pressures due to half the head of water, and to the centrifugal force of the water in the wheel, combined with the

pressure due to the ejection of the water backwards from the inner ends of the guide-blades of the wheel when they are curved, only one-half of the work, due to the fall, is spent in communicating *vis viva* to the water, to be after-

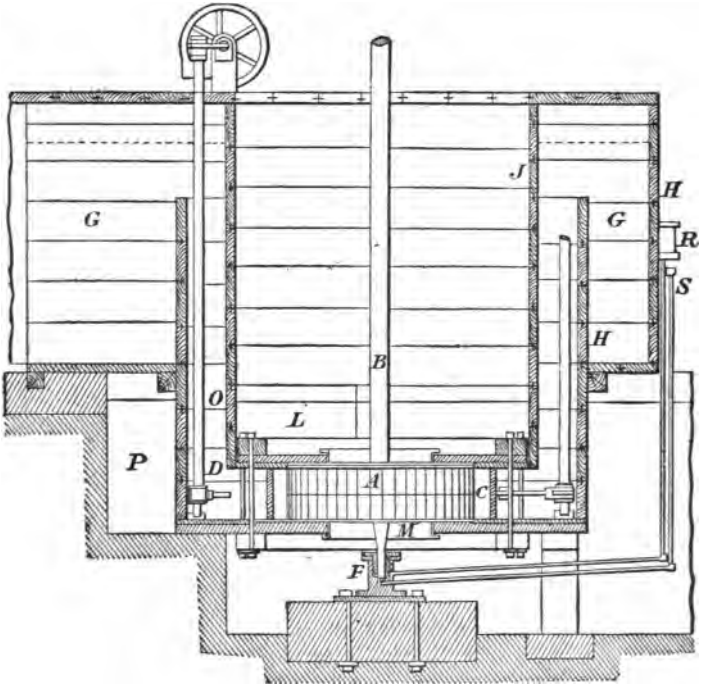

FIG. 47.

wards taken from it during its passage through the wheel, the remainder of the work being communicated through the fluid pressure to the wheel, without any intermediate generation of *vis viva*. On any increase of the velocity of the wheel, the centrifugal force increases, and so checks the

water supply; and on any diminution of the velocity of the wheel, diminishes, and so admits the water more freely."

The inward-flow turbines with suction tubes are more favourably looked upon in America than in any country. In these turbines there are two distinct pressures at work, the pressure due to the velocity of the water, and the pressure of the centrifugal force; if these two pressures are unequal, the motion will not be uniform; it can only attain a uniform motion when the two pressures are equal.

To find the best speed of the circumference of an inward-flow turbine wheel:—

Rule.—Multiply the square-root of the height of the fall in feet by 5·66.

Example.—If we have a fall of 25 feet we get

$5 \cdot 66 \times \sqrt{25} = 5 \cdot 66 \times 5 = 28 \cdot 3$ feet per second, and $28 \cdot 3 \times 60 = 1698$ feet per minute.

Some manufacturers of inward-flow turbines, use the coefficient 5·22 instead of 5·66.

CHAPTER XI.

MIXED-FLOW TURBINES.

This type of turbines is a combination of the inward and parallel-flow turbines, and not a distinct class, hence ought not to have been mentioned in the classification.

A turbine of this type is illustrated in sectional elevation,

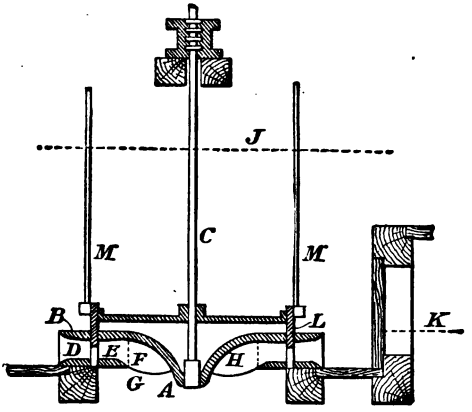

Fig. 48.

Fig. 48. A is the revolving wheel keyed on to the upright spindle C; B is the wheel in which the guide-blades D are secured; the buckets E, in the wheel A, are of the usual shape for inward-flow turbines, from the outer circumference to the dotted line F, but from F to G is a continuation of

the buckets, which has a shape similar to that of a parallel-flow turbine. From the above it will be seen that the action of the water is as follows:—The water enters through the guide-blades D, passes into the buckets E, as in an inward-flow turbine. After it has executed its power in the wheel buckets it is guided downwards by the curved surface H of the under side of the wheel and through the parallel-flow buckets. Of course, the suction tube in these turbines is dispensed with. J is the level of the water in the head-race, and K in the tail-race. The regulation of this turbine will be described later on.

CHAPTER XII.

PARALLEL-FLOW TURBINES.

In this class of turbines, the water does not flow out of it horizontally; instead, the water continues in the same downward direction as it had originally. There are various designs of these turbines, but all act upon the same principle, the only difference being in the arrangement of the various details, and the shape of the buckets and guide-blades.

Jonval Turbines.

These turbines can be fixed at any convenient position between the top of the fall and the tail-race, except that it must be as much water above the guide-blade wheel as to allow it to enter freely without any eddies. One design of a parallel-flow turbine is shown in sectional elevation, Fig. 49. In this A is the revolving wheel; B the wheel containing the guide-blades; C the revolving spindle on to which the wheel A is keyed; D is a bracket carrying the bottom end of the spindle C; E is the turbine chamber, which reaches down to the bottom of the tail-race, at which place it is bent so as to allow the water to run away freely. The water is always admitted on the top and through the turbine wheel and guide-blades, the quantity used being regulated by the sluice or penstock F, placed in the tail-race. The Jonval turbines are best placed a little above the highest tail water-level, so as to be easy of access for examination, cleaning, and repairing. For low falls this is no

doubt the cheapest, both in first cost of the motor itself as well as in erection.

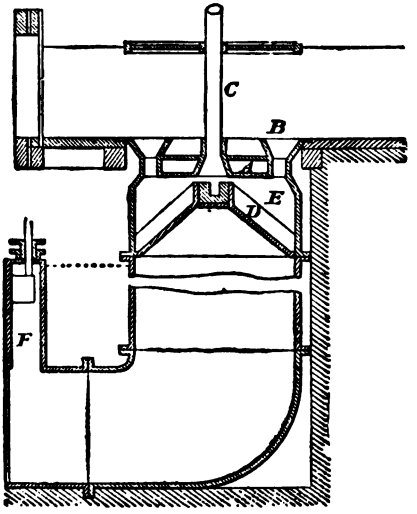

FIG. 49.

GIRARD TURBINE.

One of Girard's axial or parallel-flow turbines is illustrated in sectional elevation, Fig. 50. In this illustration, A is the revolving wheel; B, the guide-blade chamber; C, the vertical spindle on to which the wheel A is keyed; D is the foot-step, in which the spindle rotates, bolted to a foundation stone built into the bottom of the tail-race. E is the turbine chamber, and F the admission or pressure-pipe leading from the top of the fall. It is very similar in construction to the Jonval parallel-flow turbine, but it is furnished with ventilating buckets, as shown in Fig. 51 and Fig. 52, in which the ventilating holes are shown at G

and H. It will be seen that the buckets are wider on the underside than at the top, so as to release the water as soon as it has done its work. The regulating arrangement for the

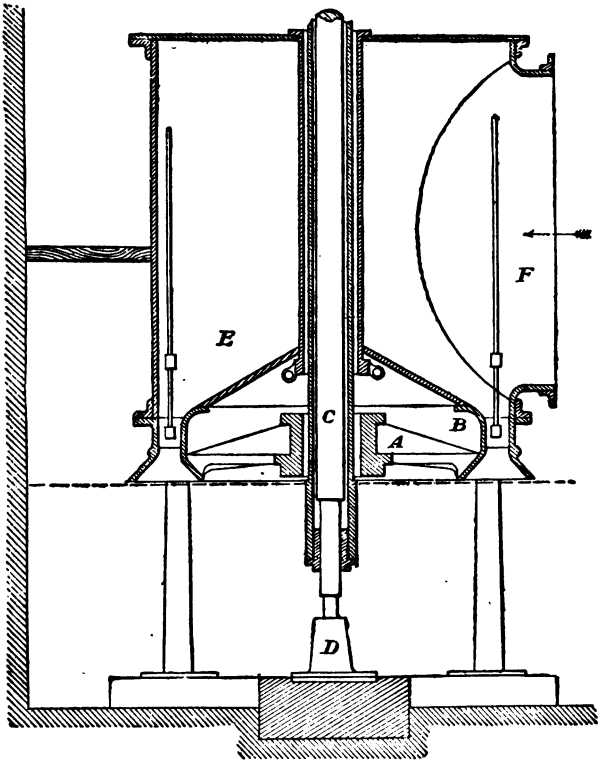

FIG. 50.

quantity of water admitted to the wheel is shown at K, Fig. 52, which will be fully explained under the head "*Regulation of Turbines.*" It will be seen that the wheel is placed just

above the tail water-level L, when the turbine is at work, to secure a free discharge of water.

The construction of the vanes for a Jonval parallel-flow turbine is illustrated in Fig. 53, in which A are the guide-blades, and B the buckets in the revolving wheel. On the

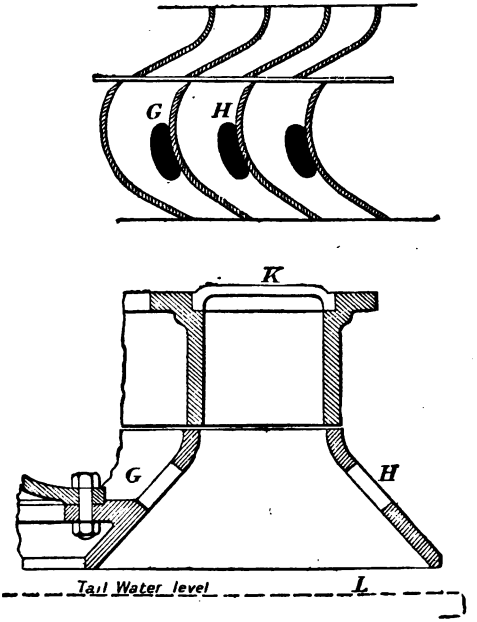

FIGS. 51 and 52.

line C C, mark off the distance between the buckets D D, &c., and from these points draw lines E E, &c., at an angle of 12° to the line C C; from the points D D, &c., draw the lines D F, D F, &c., at right angles to the lines D E, D E, &c., which lines determine the straight portion of the buckets. On the lines D F, from the points E E, &c., mark off a

distance equal to the depth of the buckets, the points found in that manner are the centres from which the curved part of the buckets are described with a radius equal to the depth of the buckets.

The guide-blades are constructed by the same method, except that the angle of the straight portion should be 15°, and the radius of the curved portion should be equal to the depth of the guide-blades, instead of the depth of the buckets.

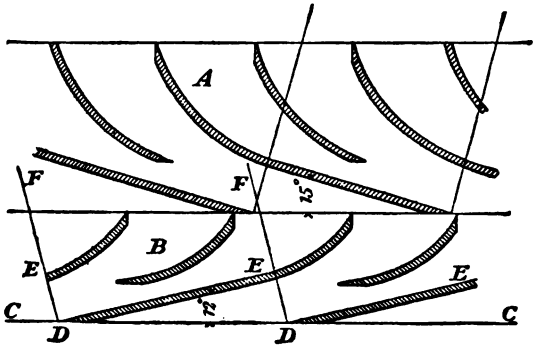

FIG. 53.

To find the diameter, in feet, required for a Jonval parallel-flow turbine,

Rule.—Divide the square-root of the height of the fall in feet into the quantity of water available in cubic feet per second; extract the square-root of the product, and multiply the remainder by 1·33.

Example.—50 cubic feet of water available per second, and the height of fall 25 feet, then

$$1{\cdot}33\sqrt{\frac{50}{\sqrt{25}}} = 1{\cdot}33\ \sqrt{10} = 1{\cdot}33 \times 3{\cdot}162 = 4{\cdot}20546 \text{ feet}$$

$$= 4 \text{ feet } 2\tfrac{1}{2} \text{ inches diameter, nearly.}$$

If we wish to find the horse-power given off by a Jonval parallel-flow turbine,

Rule.—Multiply the quantity of water available in cubic feet per second by the height of fall, and again by 0·079.

Example.—Find the horse-power of a Jonval turbine supplied with 50 cubic feet of water per second from a fall of 25 feet height. Then

$$0{\cdot}079 \times 50 \times 25 = 98{\cdot}75, \text{ or } 98\tfrac{3}{4} \text{ horse-power.}$$

We shall find the velocity of the buckets at the centre of motion in feet per second by

Rule.—Multiplying the square root of the height of fall in feet by 6.

Example.—Thus if we have a 25-feet fall, we get

$$6 \times \sqrt{25} = 6 \times 5 = 30 \text{ feet per second will be the speed.}$$

The area of the sum of the bucket openings in feet will be found by

Rule.—Dividing the velocity in feet per second by the quantity of water in cubic feet per second.

Example.—Taking the previous data, we get

$$\frac{50}{30} = 1{\cdot}66 \text{ feet.}$$

To find the depth of the buckets,

Rule.—Multiply the diameter of the centre of motion of the buckets, in feet, by 0·26.

Example.—As before, we get

$$4{\cdot}2 \times 0{\cdot}26 = 1{\cdot}09 \text{ feet.}$$

The depth of the guide-blades is found by

Rule.—Multiplying the diameter by 0·18.

Example.—As before, we get

$$4{\cdot}2 \times 0{\cdot}18 = 0{\cdot}756 \text{ foot.}$$

The number of buckets is found by

Rule.—Multiplying the square root of the diameter of the wheel, in feet, by 17.

Example.—Taking the wheel at 4 feet diameter, we get ;

$$17 \sqrt{4} = 17 \times 2 = 34 \text{ buckets.}$$

The number of guide-blades will be found by

Rule.—Multiplying the number of buckets by 0·7.

Example. —Then if we have 34 buckets, we get

$$34 \times 0{\cdot}7 = 23{\cdot}8, \text{ say } 24 \text{ guide-blades.}$$

The size of turbine spindle can be obtained by

Rule.—Dividing the number of effective horse-powers, multiplied by 90, by the number of revolutions per minute, and extract the cube-root out of the result, the remainder will be the diameter of the spindle in inches.

Example.—80 horse-powers, spindle running at 500 revolutions per minute, thus

$$\sqrt[3]{\frac{90 \times 80}{500}} = \sqrt[3]{14{\cdot}4} = 2{\cdot}43, \text{ say } 2\tfrac{1}{2} \text{ inches diameter of spindle.}$$

CHAPTER XIII.

CIRCUMFERENTIAL-FLOW TURBINES.

THERE are many varieties of these, as of the other classes of turbines, the oldest being probably the one constructed by Mr. Schiele, which is illustrated in sectional elevation

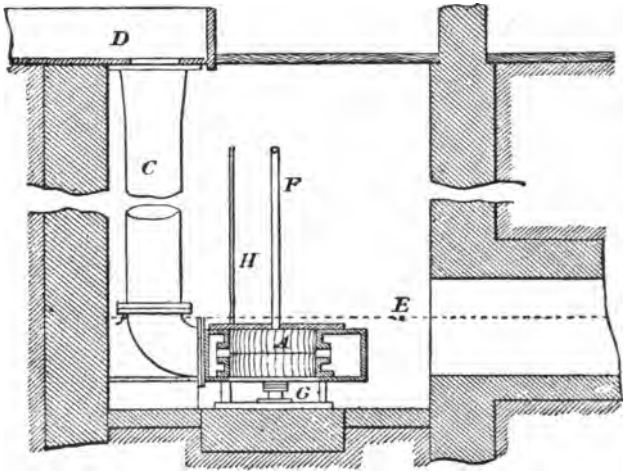

FIG. 54.

Fig. 54, and sectional plan Fig. 55. This turbine is cheap, simple, and very effective. The water, as in Professor Thomson's turbine, enters the revolving wheel tangentially at the periphery, and is exhausted from the sides, either

upwards or downwards, or both, parallel with the axis, but it has not Thomson's *vortex* chamber. A in the illustration is the revolving wheel, which is provided at the middle of its depth with a plate, forming, as it were, two sets of buckets, the water being exhausted upwards by the top buckets, and downwards by the lower buckets. In some instances the division is formed below the middle so as to

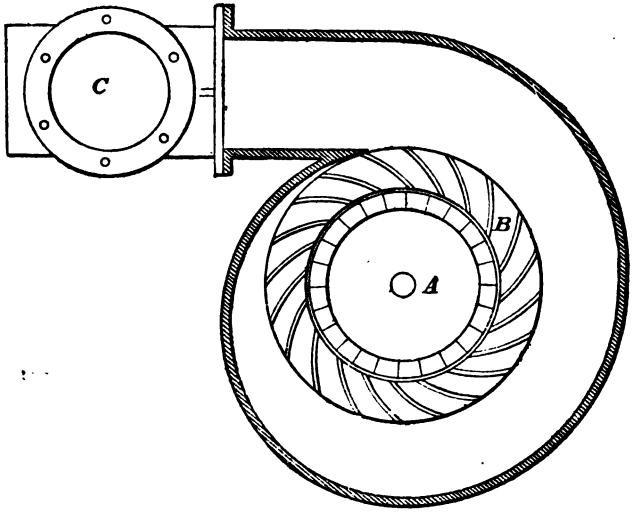

FIG. 55.

deliver more water from the top and by that means relieve the spindle foot-step of some of its weight. The centrifugal motion is given to the water before it enters the guide-blades, by making the centre of the revolving wheel A eccentric with the outer or guide-blade chamber or casing, as shown in Fig. 55. B are the guide-blades; C the inlet or pressure-pipe; D is the supply reservoir; E the level of the water in the tail-race; F the upright spindle, carried

at the bottom end in a foot-step G, secured to a stone in the bottom of the tail-race. The regulation is obtained by a slide, at the bottom of the supply-pipe C, actuated by the spindle H, and a hand-wheel. If we carefully examine the action of this turbine, we shall find that in reality, this wheel is also a combination of inward and parallel-flow turbines, because the water enters circumferentially through the guide-blades, and passes through the revolving wheel buckets upwards and downwards parallel to the upright spindle.

The circumferential-flow turbines, when used for high falls, are fitted on a horizontal spindle.

Zuppinger's Turbine.

This is a circumferential-flow turbine, sometimes called a tangent wheel. It is illustrated in part sectional elevation, Fig. 56, and part sectional plan, Fig. 57. In these illustrations A is the revolving wheel, carried on the upright spindle C, the bottom end of which rotates in the foot-step D, Fig. 57. E is the water source; F the pressure or supply-pipe; G the supply nozzle, fitted with a regulating slide H, adjusted either by a lever and screw or rack and pinion. J are the guide-blades or vanes. The water flowing through the guide-blades enters the wheel buckets B at the circumference, flows through them in a radial direction, leaving the wheel at its interior periphery. This wheel might be termed *partial admission turbine*, because the water only acts upon a few buckets at one time. These wheels are specially adapted to low falls.

A radial-flow turbine of the outward-flow type is illustrated in Figs. 58, 59, 60, and 61. Fig. 58 is a sectional elevation; Fig. 59, a sectional front view; Fig. 60, part enlarged sectional elevation; and Fig. 61, part enlarged sectional front view, the latter two figures illustrating the regulating arrangement.

It will be seen from these illustrations that in this turbine the revolving wheel A, is fitted on a horizontal spindle C, carried in two bearings D and E. B are the buckets in

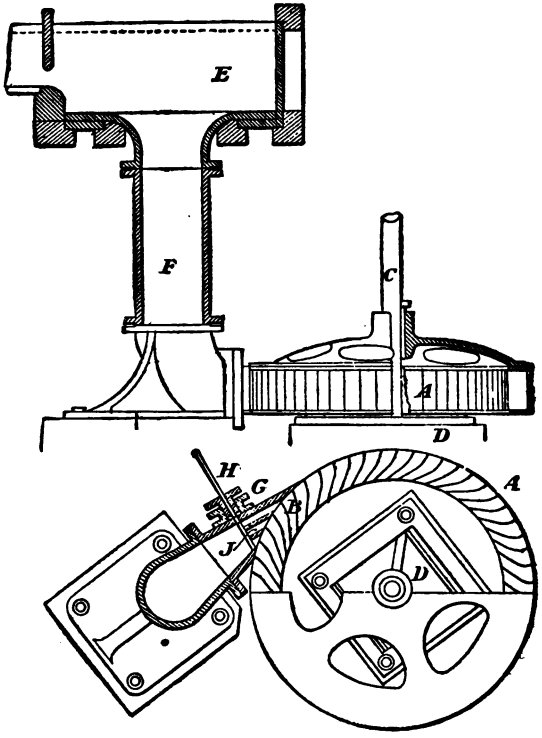

FIGS. 56 and 57.

the revolving wheel A; F are the guide-blades; G the inlet- or pressure-pipe; H the level of the tail-water; J is the regulating slide, furnished with teeth, into which gears a spur pinion K, rotated by the spindle L, the latter being

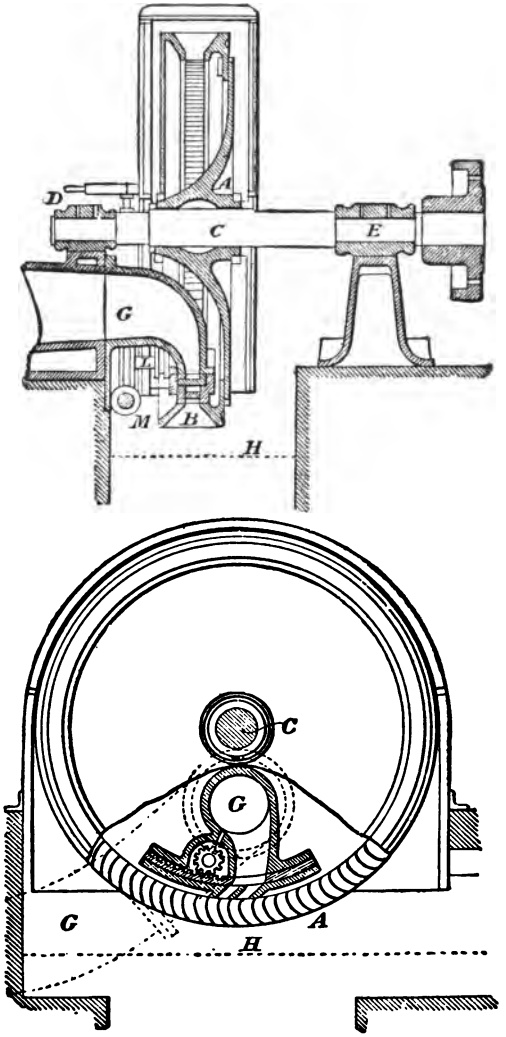

FIGS. 58 and 59.

worked by a worm N and worm-wheel M, Fig. 60. The inlet of the water is in this case also partial, and escapes from the wheel vertically.

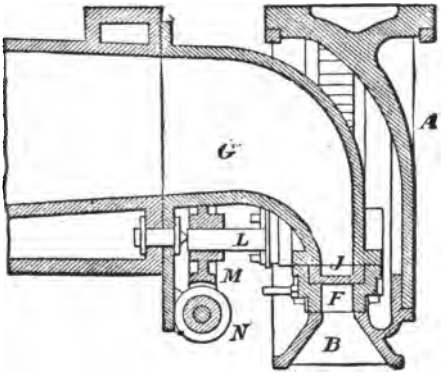

FIG. 60.

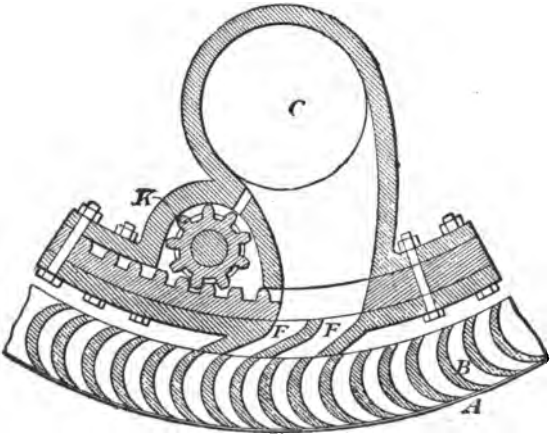

FIG. 61.

The velocity of the flow of the water through the guide-blades in these turbines will be found by

Rule.—Extracting the square root of the height of fall in feet, multiplied by 64·4, and multiplying the remainder by from 0·95 to 0·92.

Example.—If we have a height of fall of 25 feet, then

$$0{\cdot}95\sqrt{64{\cdot}4}\times 25 = 0{\cdot}95\sqrt{1610} = 0{\cdot}95\times 40{\cdot}12 = 38{\cdot}114$$

feet per second.

The total area of guide-passages in square feet is obtained by

Rule.—Dividing the quantity of water obtainable in cubic feet per second by the velocity of the flow of the water through the guide-blades, multiplied by 0·894.

Example.—25 feet height of fall, and 20 cubic feet of water per second, we get

$$\frac{20}{0{\cdot}894\times 38} = 0{\cdot}58 \text{ square foot.}$$

The number of revolutions per second for tangential wheels is found by

Rule.—Multiply the square root of the quantity of water in cubic feet per second, by 1·5.

Example.—50 cubic feet of water per second, then

$$1{\cdot}5\sqrt{50} = 1{\cdot}5\times 7{\cdot}07 = 10{\cdot}6 \text{ revolutions per second,}$$
$$10{\cdot}6\times 60 = 636 \text{ revolutions per minute.}$$

Usually these turbines are run very fast, from 180 to 800 revolutions per minute, or even sometimes at a still greater speed

CHAPTER XIV.

REGULATION OF TURBINES.

A VERY important matter is the regulation of turbines. Sometimes the whole of the power is required to be expended by the turbine, at other times only a part of the power is wanted. Sometimes there is water to be had in abundance, at other times there is a scarcity of water; frequently in the dry summer time there is not a fourth of the quantity as compared with the amount available in the winter time.

Some classes of turbines will give off a high efficiency when fully supplied with water, others give a very small efficiency when the water-supply is reduced below one-half the amount for which the turbine is constructed. Hence the construction and arrangement of the regulating apparatus is of the utmost practical importance.

OUTWARD-FLOW TURBINES.

In these turbines, which receive the water at the centre and deliver it at the periphery of the revolving wheel, the regulating apparatus consists of a ring, inserted between the outer periphery of the guide-blades and the internal periphery of the revolving wheel, as illustrated in Fig. 43, page 77. This ring is raised or lowered by means of the screws D, and spur gearing, and a hand-wheel situated at any convenient place in the building. This ring can, therefore, be raised or lowered according to the amount of water required to do the work. The great objection to this arrangement is,

that it reduces only the area of the guide-blades, and not that of the buckets in the revolving wheel; a great con traction is produced as the water leaves the guide-blades, but it immediately enters the buckets, which are not reduced, and can, therefore, not fill them with the same velocity as it has attained, hence a great loss in the efficiency of the turbine.

The above objection is partly overcome by the arrangement of the wheel invented by M. Fourneyron, illustrated in Fig. 43, in which the revolving wheel is divided into two, three, or more tiers of buckets, one above the other. In this case the same arrangement of regulating ring is adopted as in the single tier wheel, illustrated in Fig. 41, page 74, but as the quantity of water available is increased one of the tiers of buckets is shut off by the sliding ring, by lowering it by the screws and hand-wheel, and if the amount is decreased both or all the tiers may be kept open. From this it will be clearly seen that one tier should be calculated the size required when the smallest available quantity of water is taken as the basis. One objection exists, however, in this arrangement, namely, that the skin surface or wetted surface increases the friction, and the turbine is more liable to get choked by leaves and other foreign matter.

Inward-flow Turbines.

One method sometimes adopted for regulating the inward-flow turbines, consists in the sliding ring, similar to that used for the outward-flow turbine, as illustrated in Fig. 43.

Another arrangement frequently, or we might say usually adopted, consists in making the guide-blades movable, so as by turning them, the angle of discharge is increased or diminished according to requirements. This arrangement is illustrated in elevation Fig. 46, page 84, and plan Fig. 62, which is Professor Thomson's *Vortex* turbine. In these figures

O are the pivots for the four guide-blades, on the upper end of which pivots are secured L-levers P, connected by rods C, so that by moving one of the L-levers P, by the spindle N, all the four guide-blades are turned. The spindle N is placed at any convenient situation above the highest water-level, in which place is fitted a worm, worm-wheel, and hand-wheel, by which means it is actuated. This plan is

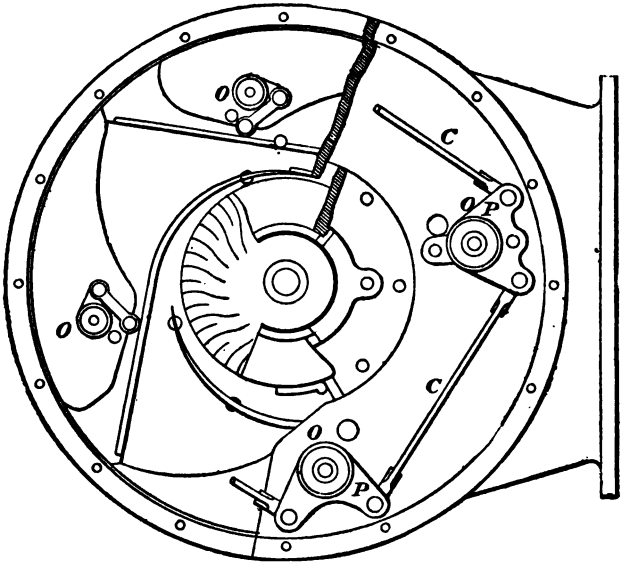

FIG. 62.

adopted so as to change the position of the guide-blades slowly, to prevent any sudden shocks in turning them, also to give a better purchase of power necessary to turn them. There is the same objection to this arrangement as to the sliding ring, that it alters the discharge area of the guide-blades, but not the capacity of the buckets. There also

exists the objection that in altering the angle of the guide-blades, the wheel also runs at a different speed.

Mixed-flow Turbines.

These turbines are regulated precisely in the same manner as the ordinary inward-flow turbines, as in Fig. 48, page 88, in which the annular ring L is raised or lowered by the screws M.

Parallel-flow Turbines.

The manner in which a Jonval parallel-flow turbine is regulated is shown in Fig. 49, page 91, in which case it is done by means of a sluice or penstock F, placed in the tail-race; this is especially adapted for low falls.

Another method used for regulating this class of turbines for low falls consists in fitting the guide passages with vertical slides, shown in Fig. 63. The slides A are secured to round rods B; the latter for high falls are single, but for low falls two or three of these rods are secured to a cross-head C, the centre rod is carried up to any convenient height, and raised or lowered by means of a screw and hand-wheel.

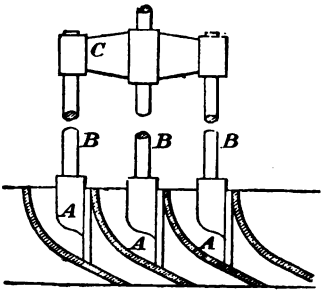

Fig. 63.

The slides are made of various shapes to suit the fancy of the designer; two of these are shown at A and B, Fig. 64.

Again, the method of raising and lowering the slides also varies; some engineers, instead of using screws, gearing, and hand-wheel, adopt the method illustrated in Fig. 65. Instead

of the centre rod C, Fig. 63, being screwed at the top end, it is fitted with a roller carried on a pin, which latter passes through the top of the rod or spindle C. The rollers slide in a cam D, Fig. 65, furnished with two grooves, E and F; at G the groove is inclined, so as to raise or lower the spindles C according to the direction the cam D is turned. The top of

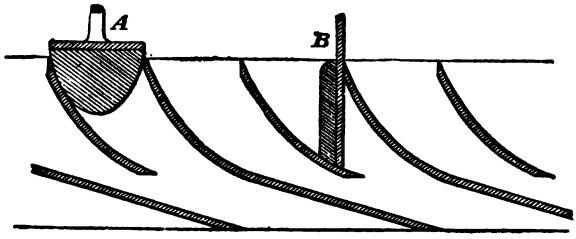

FIG. 64.

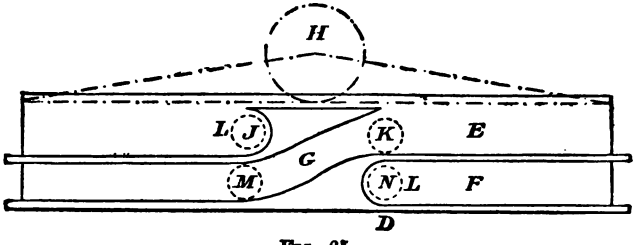

FIG. 65.

the cam D is furnished with teeth, so as to act as a bevel wheel, and a pinion H is working into the same; by that means the cam is turned either way. The circles J and K indicate the position of the rollers L, when the guide-passages are open, and the circles M and N when the guide-passages are closed.

A very good arrangement for regulating the parallel-flow turbines was invented by M. Girard, which is illustrated in

sectional elevation Fig. 66, and plan Fig. 67. In this arrangement A is the revolving wheel containing the buckets;

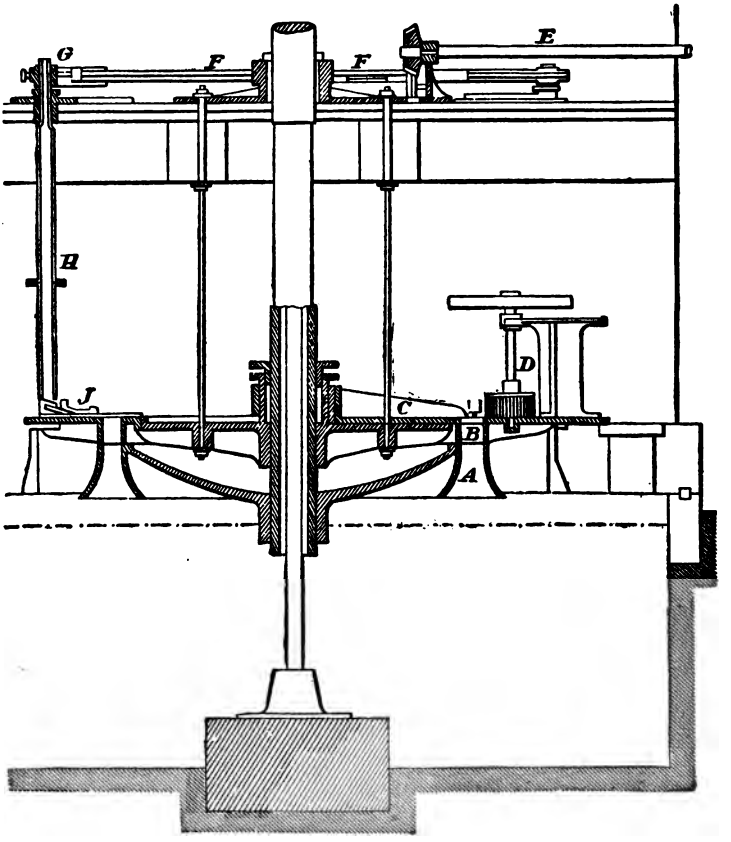

FIG. 66.

B is the casting containing the guide-passages; C, differential register-valve, with surface covering one-tenth of the circumference of the guide-passages diameter; D is the valve-

spindle; E a spindle for actuating the segment wheel, F working the slide-valve L; G are V-pieces operating the slide-valve; H is a hollow column; J, levers for moving the slide-valve; K copper-guides; L cast-iron slide-valve. It will readily be seen that by coupling the register-valve C and the slide-valve L, the required number of orifices can be opened and closed; by that means the admission of the water can be regulated to the greatest nicety.

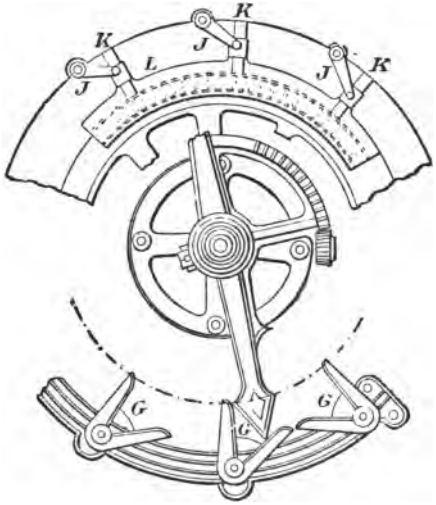

FIG. 67.

The regulating gear adopted by Mr. W. Gunther for his parallel-flow turbine is illustrated in Fig. 68 and Fig. 69, Fig. 68 being a sectional elevation, and Fig. 69 a sectional plan. The sluice is a rotary slide-valve A. The guide-passages closed are segmental, as shown at B and C, one segment on each side of the centre; this being the proper way, as it does not put any side strain on the bearings, the only pressure being that due to the weight of

the turbine. The slide A is provided with teeth on its periphery, working into a worm D, keyed on to a spindle E, which latter works through a stuffing-box and gland F, and operated by means of a hand-wheel. This is an efficient mode of regulating, because part of the guide-passages are

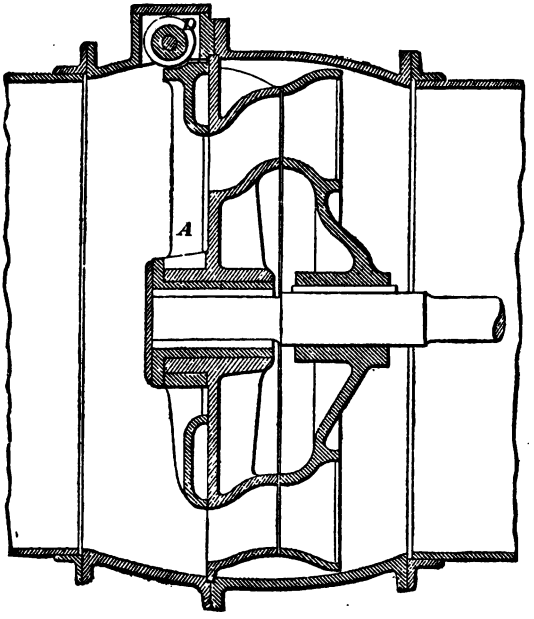

FIG. 68.

entirely closed, the other passages open, hence the flow of the water is not interfered with; however, there is this objection, that when a passage is only half closed there is a sudden enlargement after the water has passed the circular slide-valve A.

Another regulating apparatus for parallel-flow turbines,

constructed on the same principle as the leather roller, already described and illustrated in Fig. 27, page 58, for regulating water-wheels, is illustrated in Fig. 70. This regulator consists of an arm A, fitting loosely and turned on the vertical turbine spindle C, by means of a spur-wheel B

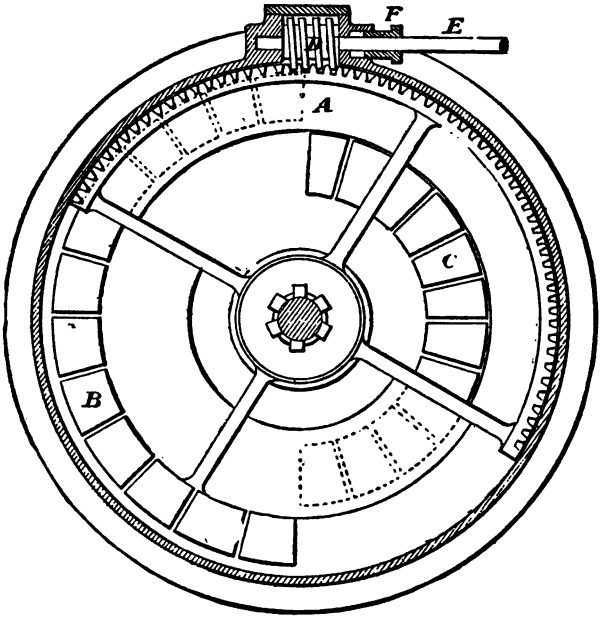

FIG. 69.

and pinion D. On each end of the arm A is provided a spindle, on to which the two rollers E and F revolve. Two bands of indiarubber, leather, or canvas, faced with strips of wrought iron; the bands are secured at one end to cross-bars, G and H, in the guide-wheel, the other ends are wound round the rollers, E and F. When the arm A is rotated one

way it opens the guide-passages, if turned the other it gradually closes them. This method is very old; it has done

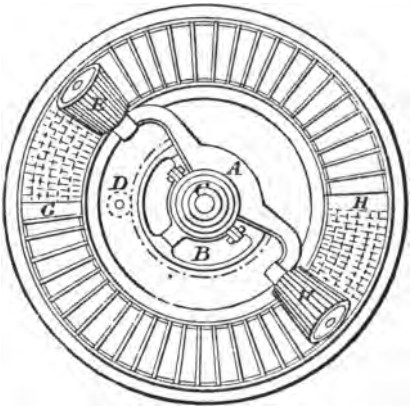

FIG. 70.

good service, and is still used by some engineers in preference to the modern arrangements.

CIRCUMFERENTIAL-FLOW TURBINES.

These turbines are regulated in various ways. The Schiele turbine, illustrated in Fig. 54, page 97, is regulated by a valve in the fall-pipe C, which is raised or lowered by the rod or spindle H, and a hand-wheel placed on the floor above the turbine.

The Zuppinger turbine, illustrated in Fig. 56 and Fig. 57, page 100, is regulated by a slide H, actuated by a rack and pinion, screw and hand-wheel, or by a lever. It will be seen, referring to plan Fig. 57, that there are three guide-passages J, and the slide can be adjusted to cover one or two of them, according to requirements.

An enlarged sectional elevation, Fig. 60, and a sectional

front view, Fig. 61, page 102, show the regulating arrangement adopted by M. Girard for this radial outward-flow turbine. In this turbine A is the revolving wheel, B the buckets in the wheel, F and F are two guide-passages. One or both of these passages can be closed by the regulating slide J, which is provided on its inner periphery with teeth gearing into the pinion K, which latter is keyed on to a spindle L, and receives its motion through a hand-wheel, worm N, and worm-wheel M. By that means when the hand-wheel is rotated either one or both of the guide-passages F can be totally or partially closed.

CHAPTER XV.

DETAILS OF TURBINES.

Top Bearings.

A very good bearing for a turbine, when the turbine wheel is below the bearing, consequently out of the water, away from sand and grit, and furnished with an excellent adjustment, is illustrated in section Fig. 71. It consists of a top

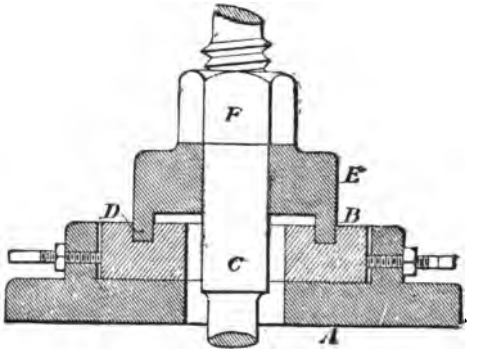

Fig. 71.

casting A, furnished with three or four adjusting screws so as to adjust the block B laterally; C is the turbine spindle, working clear of the hole in the casting A and block B. The block B is furnished on the top side with a groove D, into which fits a ring on the washer E, this washer also fits the

turbine spindle C; the latter being furnished with a nut F, which admits of the vertical adjustment of the spindle C.

Illustration Fig. 72 shows another top bearing, working

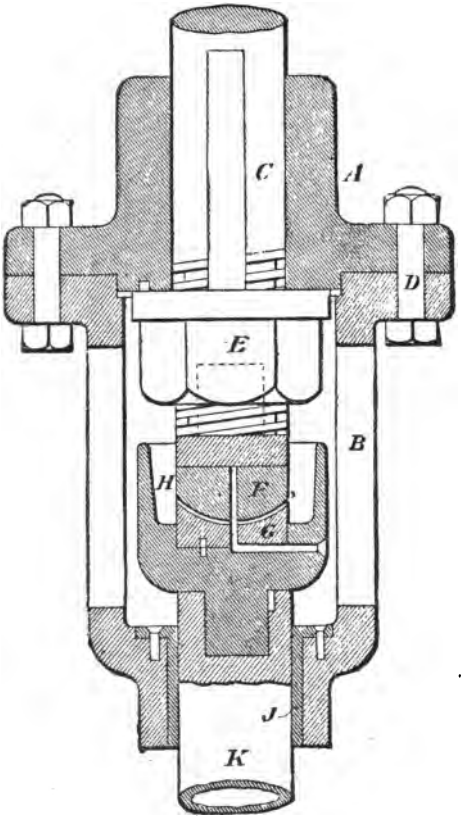

FIG. 72.

clear of the water. It consists of a casting A, provided with a long boss bored out to fit the top of the driving spindle C, into which the latter is firmly keyed; B is a cast-iron lantern

secured to the casting A by bolts D. E is a flanged nut fitted on the spindle C, by which the revolving turbine wheel is adjusted vertically. F is a loose washer of gun-metal or phosphor bronze placed between the end of the spindle C and

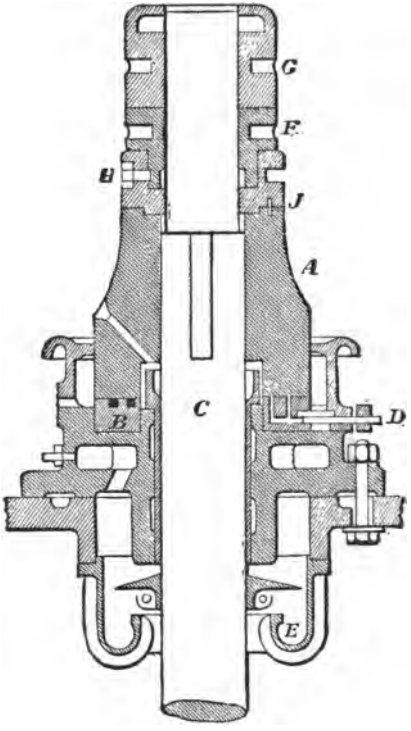

FIG. 73.

steel toe G; in the top of the turbine spindle K is fitted a cast-iron cup or dish H for containing the lubricant. J is a long gun-metal bush, in which the hollow cast-iron turbine spindle K works.

Fig. 73 is a sectional elevation of a top bearing consisting

of a casting A, into which the spindle C is keyed; this casting rotates on a gun-metal ring B, furnished on the top side with two grooves, into which oil is pumped through the small pipe D, the superfluous oil passing into the cup or oil catcher E; F and G are two nuts furnished at the bottom by a lock screw H and wedge J.

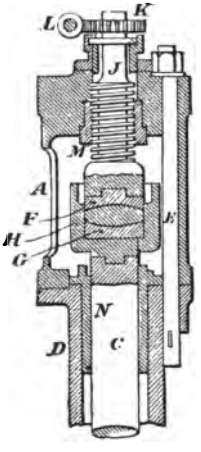

FIG. 74.

A modification of the top bearing, Fig. 72, is illustrated in Fig. 74. It was designed by M. Fontaine. It consists of an open casting A, which is secured to the hollow spindle D by the bolts E; C is the turbine spindle. F and G are two hardened steel washers, between which is placed a lens-shaped gun-metal washer. H is a cast-iron cup for the lubricating oil; this cup is at the bottom recessed into the top of the spindle C. By the screw J, worm-wheel K, and worm L, the spindle is adjusted vertically; the screw J and the spindle C work in gun-metal bushes, M and N respectively.

A top bearing adjusted by means of screws and wedges is illustrated in sectional elevation Fig. 75; and sectional plan, Fig. 76. In this, A is a casting or girder upon which the bearing rests; B is the cast-iron bearing, made in two parts bolted together by the bolts D; C is the turbine spindle; E is a top plate for the bearing, the screws F, for adjusting the wedges G, work in this plate and the bottom plate H; by the wedges G the spindle C is adjusted laterally. J is an oil deflector, guiding the superfluous oil into the oil catcher K. L are springs holding the gun-metal bushes up to their work.

The top bearings are frequently made like ordinary thrust bearings used for propeller shafts on board of ships, the surfaces being calculated according to the weight the spindle has to support.

Bottom-bearings or Foot-steps.

The design and construction of the foot-steps, and the means provided for lubricating the same, is very important, as they support heavy weights and frequently revolve fast,

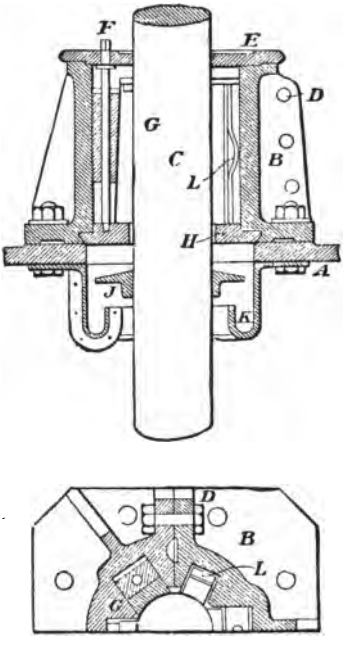

Figs. 75, 76.

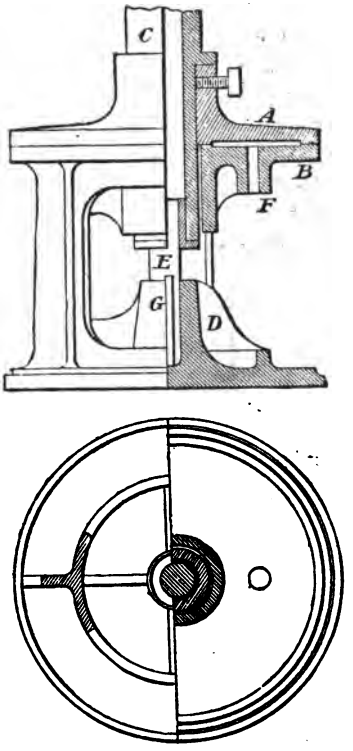

Figs. 77, 78.

so are liable to become hot. This defect M. Girard has overcome by his hydraulic pivot, which is illustrated in half elevation and half section, Fig. 77; and half elevational and half sectional plan, Fig. 78. It consists of two cast-iron

plates A and B; the top casting A being keyed on to the hollow spindle C. The lower plate B is cast in one with the ordinary foot-step D, into which the fixed spindle E is put, and prevented from turning round by means of a key G; F is a boss on the plate B, into which is screwed a small pipe, or sometimes the pipe is secured by a flange and bolts or studs, bringing water from the head-race, by which means water is admitted into the space formed between the two plates A and B. The diameter of the space, or the surface on which the water acts, must be calculated in accordance with the weight to be supported, and the head of water from the surface in the head-race to the space between the two plates A and B.

Another arrangement of hydraulic foot-step is illustrated in sectional elevation Fig. 79. It consists of a plunger A, furnished with a steel step or toe B, working against a steel toe D, secured to the turbine spindle C. The plunger works inside the foot-step casting L, and through a stuffing-box and gland E. Water is admitted underneath the plunger A by means of the small pipe F. The defect experienced with hydraulic foot-steps has always been the difficulty of keeping the packing tight any length of time, and if it was perfectly tight the packing would soon burn away. The arrangement shown in Fig. 79 is the design of Professor Radniger, of Vienna.

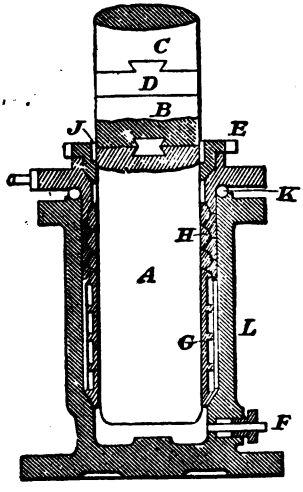

FIG. 79.

G is a brass bush fitted on to the plunger A; above this ring are placed three split rings H, of an alloy of tin, above

the gland E is placed leather rings J, and between the gland and the stuffing-box is placed a guttapercha or india-rubber ring K.

A simple and good foot-step is illustrated in sectional elevation Fig. 80. A is the cast-iron step, bolted down by the bottom flange to the foundation. B is a spindle, secured into the casting A, which spindle can be raised and lowered by the cotter C, and nuts E. The spindle D is of cast iron cored out at F for admitting oil for lubrication; G is a balance washer,

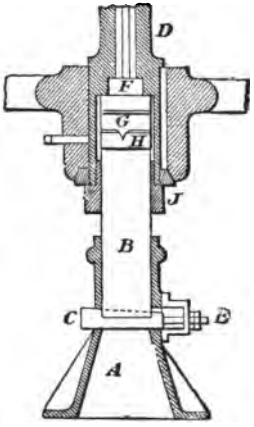

FIG. 80.

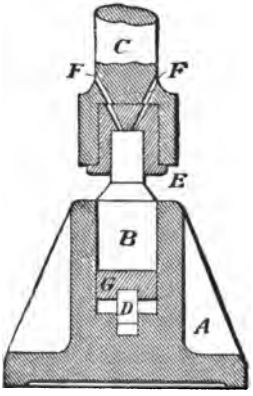

FIG. 81.

and H the washer which works against the top of the fixed spindle B. This is a very good arrangement, because the sand and grit contained in the water cannot lodge between the bearing surfaces. J is a brass bush in the revolving wheel boss.

A foot-step fitted with lignum-vitæ pivot is illustrated in sectional elevation, Fig. 81. It consists of a cast-iron foot-step A, at the bottom part of which is fitted a wrought-iron plate G, which is raised or lowered by a wedge D; or

sometimes, instead of the wedge D, a lever adjustable by a screw and hand-wheel is employed for raising the pivot as it wears. B is the pivot made of lignum-vitæ, having the grain of the wood perpendicular; this pivot is working in a gun-metal bush E, fitted into the bottom end of the turbine spindle C, which is swelled to receive the bush E. The holes F F are provided for lubricating the top of the pivot B by water, which is the best lubricant for lignum-vitæ. The pivot is in some cases made square in the foot-step A, at other times it is made round and prevented from turning round by a key.

Lubrication of Turbines.

This is also a very important matter. We have just seen some instances how the top bearings and two instances how the bottom bearings or foot-steps are lubricated.

Another method sometimes adopted for lubricating the foot-steps is shown in Professor Thomson's *vortex* turbine, Fig. 47, page 86, in which the foot-step F is furnished with a gland and stuffing-box, which latter is made oil-tight by means of hemp or leather packing. The bottom of the bored part of the foot-step is fitted with a hardened steel button. There are two oil chambers in it, one above and one below the rubbing surfaces, one pipe leading the oil from the lubricating box R to the top part of the foot-step, and another pipe conducts the oil from the lower part of the chamber and terminates with a cock S. The cock S can be regulated, and if water should enter into the foot-step, or the oil pipe by some means should get stopped up, it will be at once detected at the cock S.

The manner in which foot-steps with lignum-vitæ pivots are lubricated is shown in the illustration, Fig. 81, page 121.

Governors.

The governors for turbines and water-wheels must be made very powerful, strong, and certain in their action.

There are various forms and designs; some are superior to others in one way and inferior in others; but whatever the design may be they ought to be constructed on the indirect-acting principle; that is, the governor does not actually work the throttle-valve or sluice-gate, or other regulating arrangement, only put it in gear with some motor arrangement, which does the heavy work; otherwise the governor will be of very large dimensions.

An arrangement of a governor working on the direct-acting principle consists of an ordinary fly-ball governor of the Watt type, actuating the lifting screws attached to the slides for closing the guide-passages. The governor spindle is driven by pulleys and belt from the vertical turbine spindle; at the bottom of the spindle is keyed a bevel wheel, gearing into another wheel on a short horizontal shaft, which shaft has another wheel gearing into wheels actuating the lifting screws of the slides. A sleeve is fitted on the governor spindle, the top of which is furnished with a cone pulley, driven by another cone pulley fitted on the turbine spindle by a belt; this belt is raised and lowered by a lever arrangement from the governor slide. On the bottom of the sleeve on the governor spindle is a bevel wheel, gearing into the wheel on the horizontal shaft. By the differential gearing, the slides in the guide-passages are raised or lowered as required to keep a constant regular speed.

Hett's Turbine Governor.

Mr. Hett's turbine governor is illustrated in Fig. 82. This governor consists of a central ball governor, generally known as the "Porter's Governor." A is an upper cone pulley driving a bevel wheel running loose on the vertical

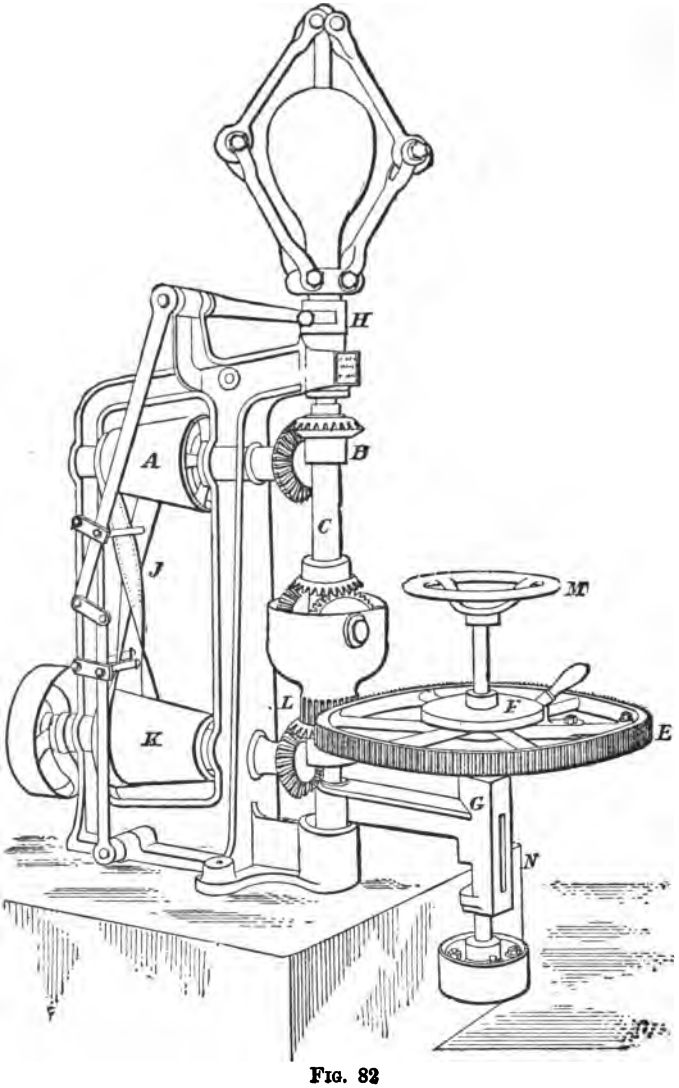

FIG. 82

governor spindle B, connected by a sleeve C, with the upper pinion of a "jack-in-the-box." The lower pinion of the "jack-in-the-box" is fast on the governor spindle B. As each pair of wheels have the same number of teeth, it follows that, with the governor slide H at mid-position, the upper wheel of the "jack-in-the-box" will revolve at the same speed as, but in the opposite direction to, the governor spindle and lower wheel. Therefore, the "jack-in-the-box" will be stationary. Should, however, the speed of the machinery vary and the balls rise or fall, the belt J will be moved from the centre of the cone pulleys A and K, and the "jack-in-the-box" will revolve in one direction or the other. The speed at which it moves will be greater the further the belt travels from its central position. The spur pinion L, on the "jack-in-the-box" motion gears with a loose wheel E, on the spindle of the hand regulating wheel M, and communicates its motion thereto by a spring clutch. The governor can be disconnected from the regulator by giving the disc F above the wheel E half a turn, which can easily be done when the governor is in motion. The governor carries a graduated index N, to show the extent of the opening of the turbine gate or sluice. The bracket G, carrying the hand-wheel or regulating spindle, is made to swivel, which is a great convenience when the governor is fixed in a cramped position.

The Snow Turbine Governor.

The Snow governor is shown in diagrammatic form in Fig. 83. It consists of one vertical and one horizontal spindle; the vertical one rotates the pinion which gears into the segment on the sluice, and the horizontal one drives the governor, which is of the fly-ball type. On one end of the horizontal shaft is keyed a pulley, which is driven from the turbine spindle by a belt, at the other end is a spur-pinion

driving a spur-wheel, and this spur-wheel drives the governor by means of the bevel-wheel. The governor arms have teeth on the inner ends, which gear into rings secured to the governor spindle, so that, as the balls rise the spindle falls, and when the balls fall the spindle rises. In the figure A is the governor bracket; B, a fulcrum upon which the lever C D oscillates; E is a link connecting the lever C D to the sector G, which is called the pawl-shifter, and is pivoted at F. On the horizontal governor shaft is secured a

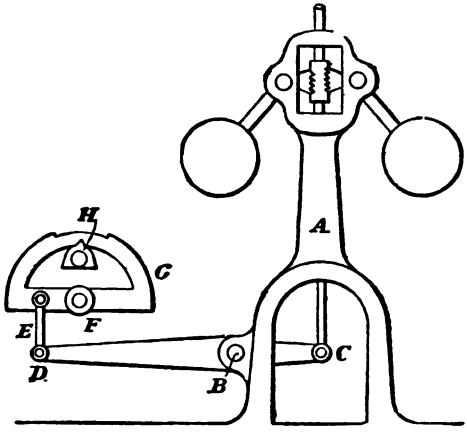

FIG. 83.

small crank, which by its rotation gives a reciprocating motion to a short connecting-rod, at the upper end of which are two pawls, called the hoisting and closing pawls, because the former opens and the latter closes the sluice, when they are allowed to gear with the ratchet-wheel, which lies just at the upper end of the connecting-rod. The sector or pawl-shifter G, would, if its upper edge were circular, prevent the pawl gearing with the ratchet-wheel, but the depression at the centre of the circumference enables them to fall into

gear when required. When the governor balls fall, the end C of the lever C D is raised so that the depression of the pawl-shifter allows the hoisting pawl to gear with the ratchet-wheel. If the balls rise, the end C of the lever C D is lowered, and the closing pawl gears with the ratchet-wheel. The ratchet-wheel turns the vertical shaft by means of two bevel-wheels; the larger of the two is on the vertical shaft. In order to prevent the governor from continuing to move the sluice when it is full open, and when the wheel is running below its proper speed, when the water is low in the penstock, there is an arrangement of reducing the gear between the ratchet-wheel and bevel-pinion, which brings into position a stop similar to the sector or pawl-shifter, which will only allow the pawl to slide freely along its stop, and prevents further motion of the sluice. In order to regulate the speed, there is a horizontal bar on the pawl-shifter, upon which slides a weight H; if this is pushed to the right, it will tend to raise D and lower C, and lift the balls of the governor, so that in order that the pawl-shifter may be in its middle position, with neither pawl in gear, the speed of the wheel must be less. For a similar reason, if it is necessary to increase the speed, the weight H must be shifted to the left.

CHAPTER XVI.

WATER-PRESSURE OR HYDRAULIC ENGINES.

In dealing with water-pressure or hydraulic engines, care must be taken to prevent any sudden check being given to descending or pressure column of water, and relief or escape valves, air vessels, accumulator or weighted plungers, or some means of lessening the shocks which the engine will sustain if the motion of the water be impeded, must be provided.

The use of water-pressure engines being to convert stored energy into active power, the water, in most of the engines acts only by its weight, very slightly assisted by the momentum.

Professor Rankine says:—"When a water-pressure engine is spoken of without qualification, it is generally understood to be a self-acting water-pressure engine; that is, an engine which differs from a mere *press*, *hoist*, or *crane*, in having *distributing valves* for regulating the supply and discharge of the water, which are moved, directly or indirectly, by the engine itself, so that it is a machine having a periodical motion, which motion having once been made to commence goes on of itself until it is stopped, either by shutting the throttle-valve and so stopping the supply of water, or by disengaging or otherwise stopping the valve motion."

CHAPTER XVII.

RECIPROCATING WATER-PRESSURE ENGINES.

THE reciprocating water-pressure engines are only appropriate for purposes where non-rotary motion is required, as for *example*, direct-acting pumping engines, organ blowers, &c. The different designs and patents for this class are very numerous, so that the author's greatest difficulty consists in the choice of the best examples to put before the reader.

SINGLE-ACTING RECIPROCATING WATER-PRESSURE ENGINES.

WESTGARTH'S ENGINE.

In this engine the length of the cylinder was equal to the whole height of the fall of water. The piston, which worked in a bored chamber, was attached by a chain to the arched head of an engine-beam above. At the opposite end of the beam was suspended a wooden spear, which passed down the pit to work the pump. The cylinder was open at the top, and the water ran into it by a trough or launder. The column of water always pressed on the top of the piston; but by admitting water below the piston the pressure was neutralised, and the piston was raised by the weight of the descending pump rods. On closing the communication with the under side of the piston, and discharging the water from the cylinder bottom, the pressure of the column again acted upon the piston and sent it down. By a simple self-acting arrangement of levers and tappets, similar to the

working-gear of the old atmospheric engine, the admission and exhaustion was alternately opened and cut-off, and the reciprocating motion of the engine continued.

Junker's Engine.

The valve-gear of one of Mr. Junker's water-pressure engines is illustrated in sectional elevation Fig. 84; and the main-valve enlarged in Fig. 85 and Fig. 86. In Fig. 84, C represents the upper end of the pressure cylinder; S the supply-pipe; D the admission port connecting the pressure cylinder C with the valve-chest; G is the exhaust or discharge-pipe; E the main piston-valve, which when above D, as in Fig. 84 and Fig. 85, allows the water to escape from the pressure cylinder, and when below, as in Fig. 86, closes the exhaust and opens the admission. The area of the valve E is made less than that of the balance piston F, with which it is connected by a rod. Hence the pressure of the water between the valve E and piston F tends to raise them both. The upper side of the piston F is provided with a trunk, working through a stuffing-box in the top of the valve-chest or valve-casing. The use of this trunk is to diminish the effective area of the upper side of the piston F, so that it shall not be more than is required to enable the water, when admitted through the

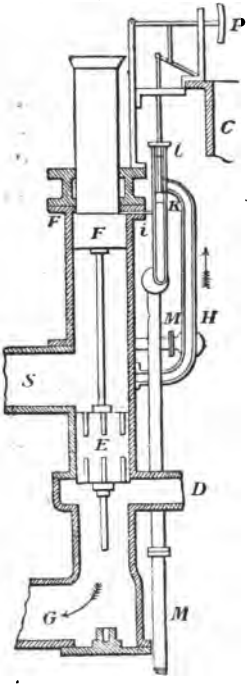

Fig. 84.

port *i*, to overcome the upward tendency of the piston, together with the friction of the piston F and valve E. H is the supply-pipe and M the discharge-pipe for the auxiliary engine for working the valves; K is the valve which regulates the admission and discharge of the water through the port *i*, precisely in the same manner as the valve E regulates the admission and discharge from the main or pressure cylinder; *l* is a plunger of the same size as K, that the pressure between them may be equalised and not tend to move K upwards or downwards. The rod to which K and *l* are fixed is connected by means of a train of levers and link-work with a lever carrying the crutch P. This is alternately raised and depressed by a tappet-rod carried by the piston in the main or pressure cylinder C.

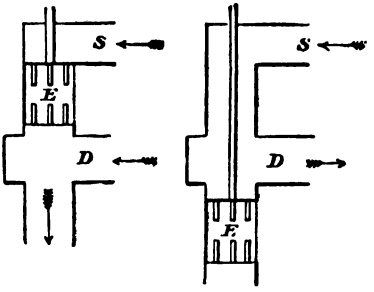

FIGS. 85 and 86.

The action of this gear is as follows:—Suppose the piston-valve E is raised, and the water discharged from the main cylinder C, as shown in Fig. 84 and Fig. 85. When the main piston approaches the bottom of its stroke, the upper tappet strikes the lower hook on the crutch P and depresses it, along with the auxiliary valve K. This admits water from S to the main cylinder C; the piston rises, and near the termination of its stroke strikes the upper hook on the crutch P, and raises the auxiliary valve K. This allows the water to discharge from the upper side of the piston F, and then the surplus pressure on its lower side lifts with the main valve E, bringing the main valve E from the position shown in Fig. 86 to that illustrated in Fig. 85, and the operation is repeated.

Trevithick's Engine.

Another water-pressure engine of this class, designed by this eminent engineer, is illustrated in Fig. 87 and Fig. 88. This engine consists of a hydraulic cylinder A, provided

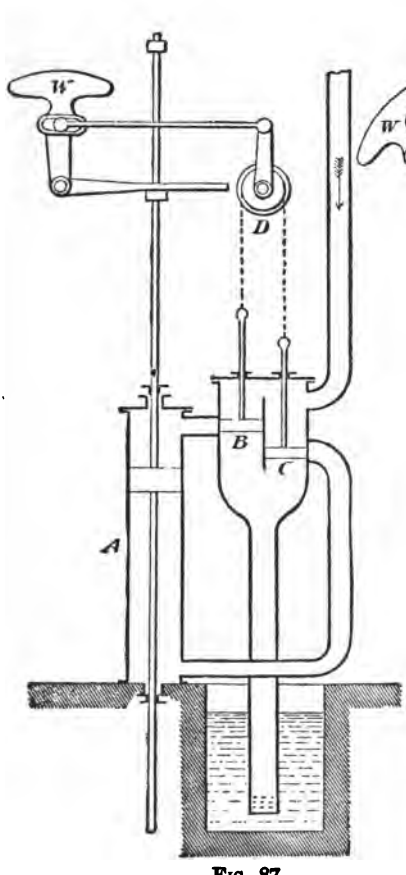

Fig. 87.

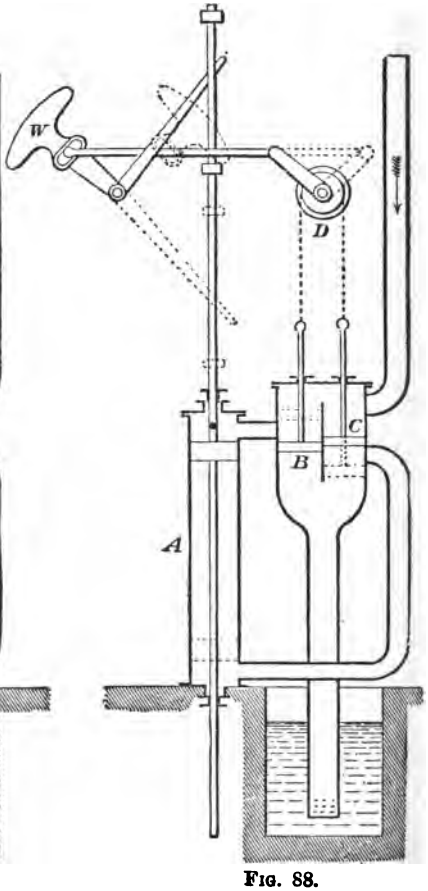

Fig. 88.

with a piston. From the cross-head of the engine, spear-rods descend to work the pumps. The valves consist of two lead plugs or pistons, B and C. Rods attached to these plugs pass through stuffing-boxes in the valve-chest covers, and are connected by means of a chain passing over a chain-wheel D. A lever on the axis of the chain-wheel is connected to the tumbling weight W. The movement of the main piston towards the end of its stroke, acting by tappets fixed on the piston-rod, caused the tumbling weight to be pushed over the centre, as in Fig. 88, and in that way the valves or plugs B and C are reversed, and the return stroke of the engine is effected.

If the plugs B and C are made to cover the ports and thereby to prevent all slip of water past them, then the driving column would be absolutely stopped at the end of each stroke, as would be also the delivery column of the pump. The consequent loss of energy would be very great; severe shocks would also be produced at the end of each stroke. To reduce the severity of these shocks Trevithick made the plugs B and C less deep than the width of the ports, as seen in Fig. 87, and thereby allowed the water to pass through from the driving column to the exhaust during the reversal of the stroke, thus preventing the absolute stoppages of the driving column. This simple and ingenious device reduced the shock at the expense of water, and the efficiency of the engine was very small.

Fairbairn's Engine.

This engine is very similar in principle to M. Junker's engine, although differing in the arrangement of the various details. This engine is illustrated in Fig. 89, in which C is the main-pressure cylinder, and P its plunger. S the supply-pipe, and D discharge-pipe, connected to the valve-chest E. F is the cataract or auxiliary engine for working the valves. The plunger P is connected with the engine-beam B B,

which at its other extremity is attached to the oscillating connecting-rod AA, which is fixed on a pivot at its lower extremity. By this arrangement the piston is permitted to rise vertically, and the spear-rod E, of the pump, is also nearly vertical in its movement. A heavy balance weight

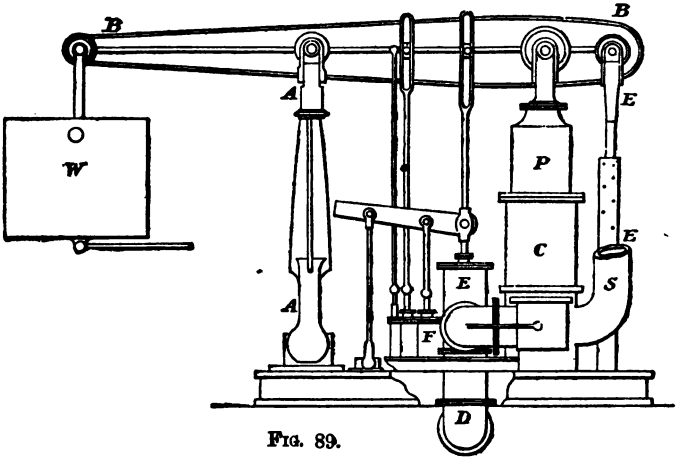

FIG. 89.

W is attached at the opposite end of the beam BB, to balance the pump spear-rods at the shaft end, so that the piston should fall in the cylinder C at an appropriate velocity, and without shock.

M. BÉLIDOR'S ENGINE.

The previous examples of single-acting water-pressure engines have been vertical, the one illustrated in Fig. 90 is horizontal. A is the pressure-pipe; B the delivery-pipe; C the pressure-cylinder; D the pump or water-cylinder; E is a three-way cock. The pipe A, closed by the three-way cock E, is in constant communication with the pipe H. The lateral opening can pass the liquid in the large cylinder C, and on its piston, that moves backwards and forwards,

and consequently also moves the pump piston D, which is coupled to the pressure-piston by the piston-rod, and forces the water from the pump-barrel through the delivery-valve up into the air-vessel F, and from thence into the delivery-pipe B. The pistons having arrived at the end of their strokes, which is the same, the cock E, by the action of the machine itself, turns and allows a portion of the water to go by the

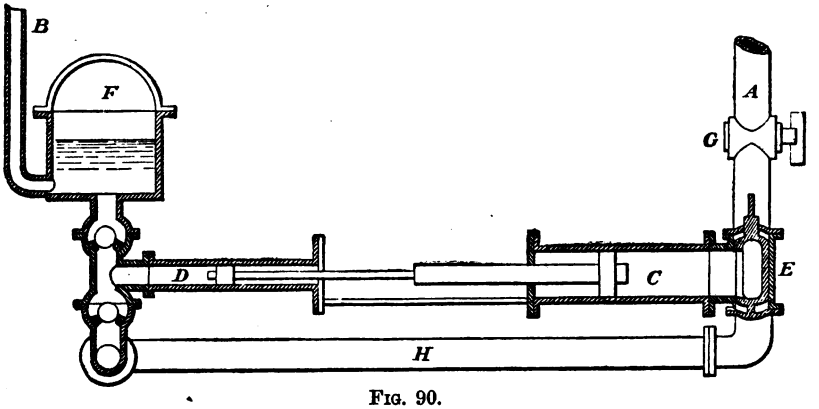

FIG. 90.

pipe A, through the pipe H and suction-valve, into the pump cylinder D, and the exhaust water from the pressure-cylinder C is allowed to escape into the atmosphere; hence the superior pressure in D drives the two pistons back to their original positions. This is repeated as long as the cock G on the pipe A is open.

DOUBLE-ACTING RECIPROCATING WATER-PRESSURE ENGINES.

It is very seldom that the double-acting water-pressure engines are made vertical, therefore we will confine ourselves to the horizontal type.

The designs of these engines are more numerous than the single-acting class. Many have been patented and some

actually made, but entirely failed because the valve-gear was not provided with an auxiliary valve. Many inventors and engineers have totally failed to see the cause; this is a very important matter, and the author will endeavour to explain it as clearly as possible. Fig. 91 is a sectional elevation of a double-acting reciprocating water-pressure engine without auxiliary valve, and Fig. 92 a sectional elevation and Fig. 93 a sectional plan of an engine fitted with an auxiliary valve. The latter is of a very bad design, the faults of which will be explained later on.

In Fig. 91, A is the water-pressure cylinder; B pressure-piston; C piston-rod; D slide-valve, of the ordinary D type; E valve-spindle. Now suppose the pressure-piston moving from right to left, in the direction of the arrow, the valve-lever, which is connected to the cross-head at its lower end and valve-spindle E at its upper end, being a lever of the first order, moves the slide-valve D in the opposite direction towards the right hand, in the direction of the top arrow. As soon as the slide-valve has travelled till the pressure-port H is just opened, ever so slightly, the water-pressure passes down the port H and reverses the pressure-piston B, and the slide-valve cannot therefore travel any further; hence, the port H cannot be open to its full extent, and the result being a very slow piston-speed, consequently very large cylinders must be resorted to.

We will now examine the action of the gear, when an auxiliary valve is employed. Referring to the sectional elevation, Fig. 92, we find that the slide-valve D, instead of being actuated direct by a valve spindle, as in Fig. 91, is actuated by a pair of valve moving pistons or plungers, J and K, which are again actuated by an auxiliary slide-valve P, Fig. 93, and levers M, either by tappets N and O, as shown in the illustrations, or by means of a lever from the cross-head. Supposing the pressure-piston B, as in the previous case, is moving from right to left in the direction of the arrow, whenever the piston arrives at the extreme

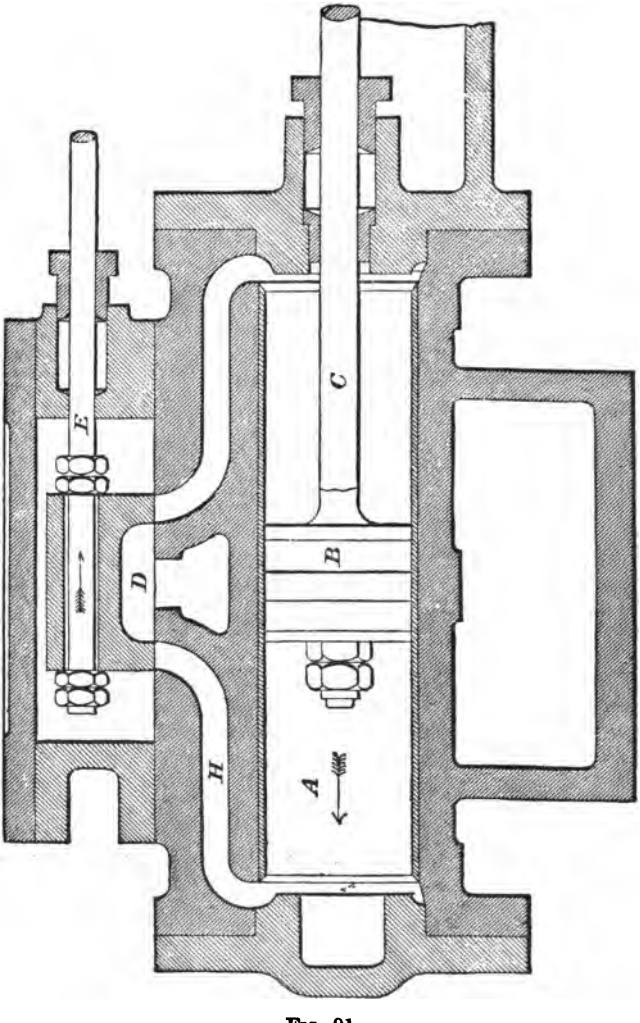

FIG. 91.

end of its stroke it strikes the tappet N, moving the auxiliary slide-valve P towards the right, opens the ports Q admitting the pressure water to the left-hand valve—moving plunger J, moving the main slide-valve D to the right; in that manner opening the main pressure-port H to its full extent, and forcing the pressure-piston B towards the right. By

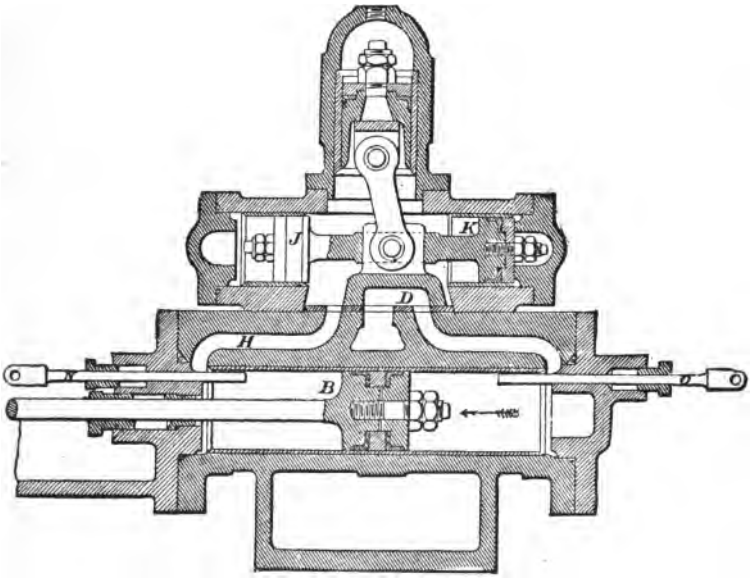

FIG. 92.

these remarks the author hopes he has been able clearly to show the necessity of an auxiliary valve for water-pressure engines. Many engineers have the idea that the water-pressure engines can be worked duplex fashion without auxiliary valve, because the duplex steam-pumps worked by steam can do so. It is not the case. They altogether overlook that steam is expansive and the piston gets a small

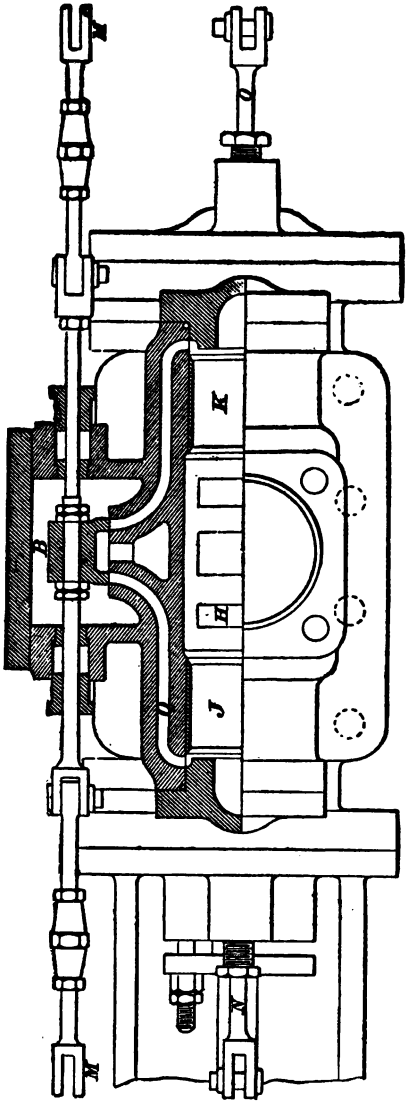

FIG. 93.

momentum, which gives the slide-valve a chance to open the port; but not so with water, it being non-expansive, and slow and steady in its flow. With water-pressure engines it is imperative to have the auxiliary valve to get anything like a reasonable piston speed.

The essential features in a good direct-acting reciprocating water-pressure engine are:—

Large pressure ports.

Few joints, levers, links, and pins in the valve-gear.

Great strength in the levers and rods to prevent any springing and back lash, which retards the reversal of the piston at the end of each stroke; hence slow piston speeds and large heavy engines.

Joy's Engine.

This engine was originally invented for the purpose of blowing church organs, but it was not long before it made its appearance in collieries in the shape of pumping engines for draining the dip-workings. This gear is illustrated in sectional elevation Fig. 94, and cross-section Fig. 95. A is the water-pressure cylinder, with ports similar to an ordinary steam-engine cylinder, B and B being the inlet-ports, and C the exhaust port. D is an ordinary slide-valve of the D type, working over the face of the three ports, and actuated by its attachment to the valve moving pistons E and E, working in the two small cylinders in the ends of the valve-box or chest G. H is the inlet-pipe for the pressure water. The pistons E and E are moved by the water-pressure, which is let into and out of their cylinders alternately by the small four-way cock I; this four-way cock being actuated by a lever J and a rod K, which is attached to an arm on the piston-rod; this rod is fitted with a set of adjustable tappets for regulating the action of the four-way cock I. The peculiarity of this arrangement of gear, for water-pressure engines, being a motion of the valve,

which can be regulated as to speed so perfectly, preventing any shocks from the water at the change of stroke, whatever may be the pressure of the water used; and also a motion of the valve which can leave no possibility of a dead point, however slowly the engine may be required to work. By reference to the illustrations it will be seen that the four-way cock I receives a complete motion from the piston-

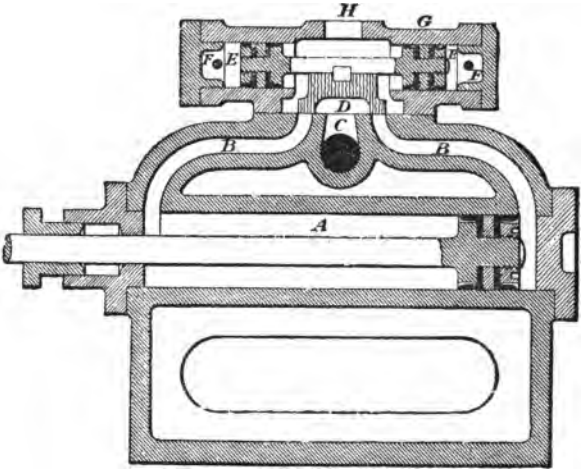

FIG. 94.

rod prior to the valve D, upon which the action of the engine depends, having any motion; hence the motion of the valve D is ensured after the piston has completed its stroke.

PFETSH'S ENGINE.

This type of water-pressure engine is illustrated in sectional elevation Fig. 96. A is the pressure-pipe admitting the water into the pressure cylinder; B is the pressure cylinder piston; C the piston-rod; D is a tappet-rod carried by the piston-rod C; E and F are two adjustable tappets

fitted on to the tappet-rod D; G G is a lever for actuating the reversing valves H and J; K is a passage, which always admits pressure-water between the two valves H and J; L is a passage between the actuating pistons H and J; M is a piston moving the main piston-valves N and O; P and Q

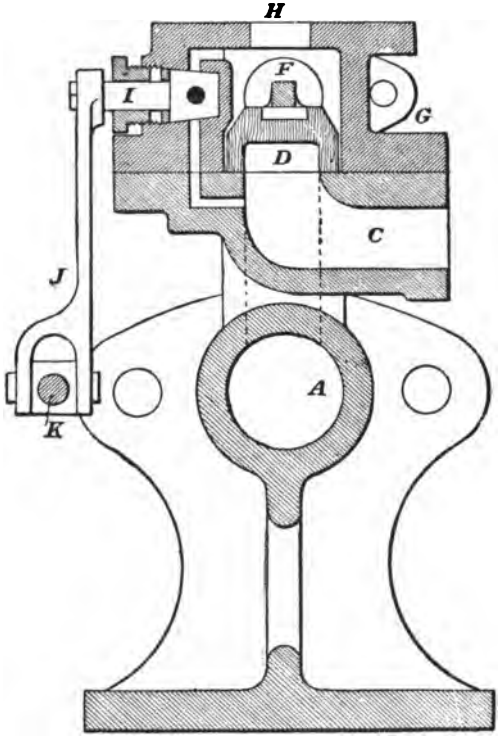

FIG. 95.

are two ports communicating between the pressure pipe A and the pressure cylinder; R is the exhaust branch.

The action of the gear is as follows:—

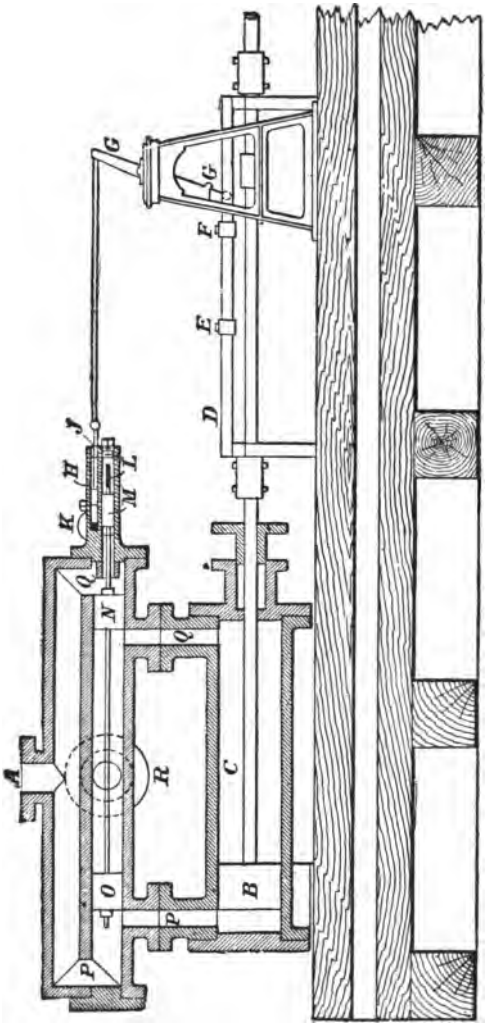

FIG. 96.

In the position indicated in Fig. 96, the pressure-water enters through the pipe A, the passages P, behind the piston B, driving it from left to right; by this operation the rod C is moved towards right till the tappet E meets the lower extremity of the lever G G, and changes the position of the valve-moving pistons H and J; immediately the pressure-water, which through the opening K always has access between the two valve-moving pistons, finds the port L open, presses up the piston M, moving it and the two main piston-valves, N and O, to the right, closing the port P and opening the port Q, which admits the pressure-water to the right-hand face of the piston B; bringing it back again into the position shown in the illustration, recommencing the same action. The water, which before had moved the piston B from left to right, escapes by the port P into the exhaust branch R. During the return movement of the piston B, the lever G G is moved, in the position represented, by the tappet F, the small pistons H and J regain their first position, and the drive-water, which has carried the three pistons M, N, and O from right to left, finding the port S open, exhausts itself by that port and the pipe R. At the moment the pressure being nearly entirely taken away from the right hand of the piston M, the three pistons M, N, and O are moved to the extreme right-hand position, as shown in Fig. 96.

Davey's Engine.

Mr. Joy's valve-gear is very good for low pressures, say up to 70 or 80 lbs. per square inch, but when greater pressures have to be grappled with there is no possibility of keeping the four-way cock water-tight. Mr. Davey's gear, illustrated in sectional elevation Fig. 97, and cross-section Fig. 98, has been worked with pressures up to 500 lbs. per square inch. In this case the four-way cock is dispensed with, and in its stead an auxiliary slide-valve is adopted. The pressure being very great, an equilibrium slide-valve

was used, so as to reduce the power required to move it. B is the main slide-valve, formed of two equal parts, the faces being exactly alike and an exhaust-port being formed through them. C is a cast-iron hoop surrounding the slide-valve, and two cup-leathers D and D arranged to prevent leakage through the joint between the two halves of the valve; E and E are two valve-moving pistons, the spindles for carrying such are screwed into the hoop C; F is the

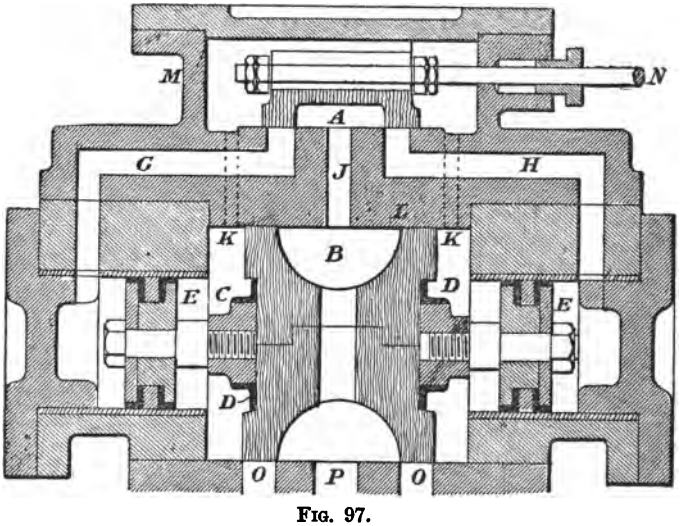

FIG. 97.

pressure-pipe; G and H are the ports for the valve-moving pistons; J the exhaust-port; K K K are small holes admitting the pressure-water from the main valve-chest L to the auxiliary valve-chest M. The auxiliary valve-spindle N is actuated from the piston-rod by a lever of the first order. When the main piston moves from left to right the auxiliary valve moves towards the left, opens the port H, admits the pressure-water to the right-hand valve-moving

piston E, moving the main slide-valve to the left, opening the main pressure-port O, admitting pressure-water to the cylinder, and the main piston travels back towards the left-hand, and so on as long as the pressure-water is admitted into the main valve-chest. O O are the pressure-ports to the

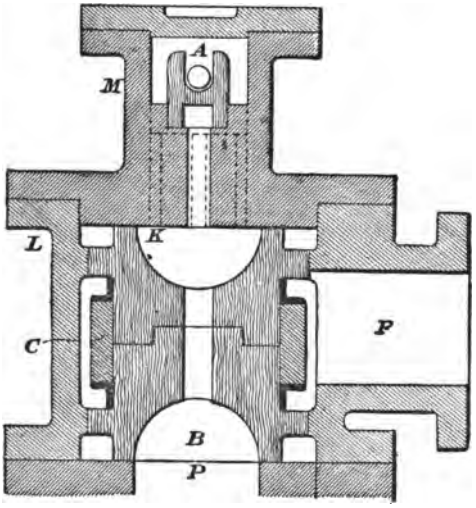

FIG. 98.

motive-power cylinder, and P the main exhaust. The exhaust from the valve-moving pistons E and E passes through the exhaust-port J, the main slide-valve B, the main exhaust-port P, and the main exhaust branch.

BJÖRLING'S ENGINE.

The author's object in this design was to reduce the number of levers, pins, and stuffing-boxes. In this case there is, as in Joy's gear, only one lever, one tappet-rod, and one stuffing-box. Fig. 99 is a sectional elevation; Fig. 100

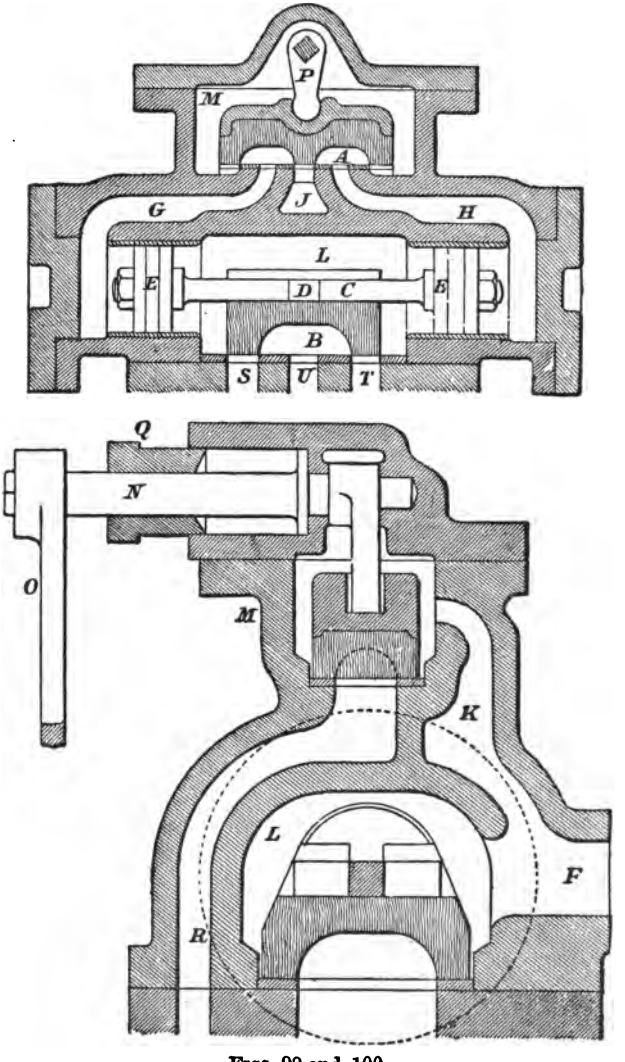

FIGS. 99 and 100.

a cross-section of this gear. A is the auxiliary slide-valve of the B type; B is the main slide-valve, both of which are made of lignum-vitæ; the auxiliary slide-valve is furnished with a cast-iron cap or cover to prevent the tongue P from wearing the wood; C is a spindle connecting the two valve-moving pistons E and E, the spindle C being furnished at its centre by a T, D, and a corresponding T is cut out of the main slide-valve B. G and H are the pressure-ports leading the water from the auxiliary valve-chest M, to the ends of the valve-moving pistons E and E; J is the exhaust-port leading to the exhaust-passage R, in Fig. 100. F is the inlet for the pressure-water; K is the passage for admitting the pressure-water to the auxiliary valve-chest M. N is the spindle, on one end of which is secured the tongue P; on the other end the lever O is keyed; Q is the only stuffing-box required. The lever O is actuated by a tappet-rod from the cross-head secured to the piston-rod. S and T are the main pressure-ports, and U the main exhaust-port.

Davey's Engine.

This is another of Mr. Henry Davey's designs for water-pressure engines, in which he employs lift-valves instead of the ordinary slide-valve. Fig. 101 is a sectional elevation; Fig. 102 an enlarged section of the valve-chest and valves; and Fig. 103 a sectional plan of the valve-chest and auxiliary slide-valve. The valves of the power cylinder are of a very peculiar construction, and are designed with a view to get rid of the difficulties encountered in applying slide or other ordinary valves to water-pressure engines. Referring to Fig. 102, the top F is the inlet, and the bottom one G the outlet or eduction-pipe; and the pipes J and K form communications to the two ends of the power cylinder. The eduction valves or annular gun-metal pistons H and H, working vertically, and each having two valve-beats, one on the inner edges I, and one on the outer edge O, of its bottom

face. As the annular valve descends, the outside beat closes the communication to the eduction-pipe; and the inlet-valve L, rising against the inner-beat, closes the supply. The inlet-valve is an ordinary single-beat mushroom valve, with its stalk projecting upwards and attached at the top to a piston N; the bottom face of this piston is constantly under the pressure of the driving column, while the top face is exposed alternately to the pressure of the driving column

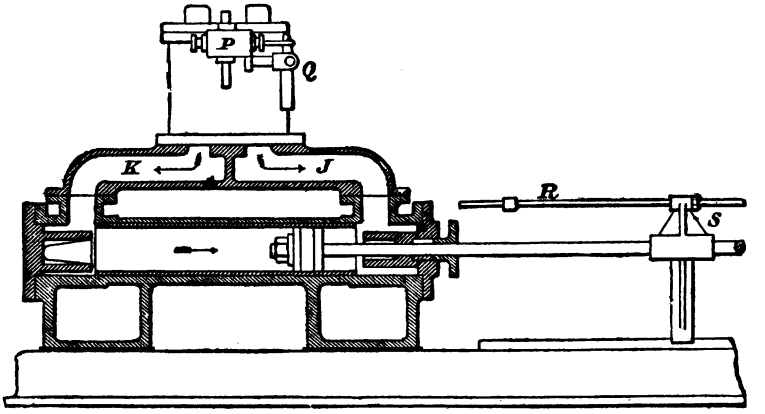

FIG. 101.

and to the pressure in the eduction-pipe, by means of a small gun-metal slide-valve P, Fig. 103, actuated by a lever Q and tappet-rod R, Fig. 101.

The action of the two valves in combination will be readily seen by supposing that the exhaust-valve is closed and the pressure-valve is open, as on the left-hand side of Fig. 102; then the pressure-valve L, in closing, rises up against the annular exhaust-valve H, and lifts it, opening the exhaust orifice G. The valves are now in the position shown on the right hand of Fig. 102. Towards the end of the stroke, the arm S attached to the cross-head of the engine

strikes the tappet and so pushes the slide-valve P, Fig. 103, over into such a position that the top of the right hand valve-piston is exposed to the pressure column, and that of the other to the eduction column. The main valves are thereby reversed, the right-hand piston being under equal pressure top and bottom, the pressure on the top of the annular valve H forces it downwards, carrying the pressure-valve L with it. When the valve H has come down on its beat O, closing the exhaust orifice, the valve L continues to

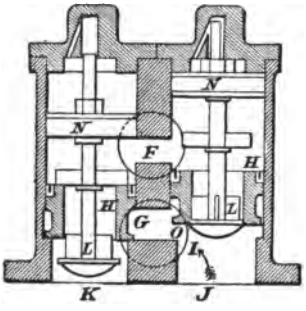

FIG. 102.

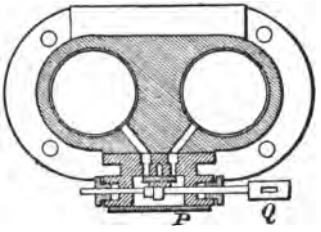

FIG. 103.

descend under the pressure above it, and opens the pipe K to the pressure-water, as on the left-hand side Fig. 102. On the other side the ascending piston causes its inlet-valve to close, and its eduction-valve to open. With this successive and alternate action of the valves they cannot, in working, be placed in a position which would allow any water to slip through uselessly; that is to say, it is impossible for the exhaust-valve and the pressure-valve ever to be both of them open at the same time. The opening of the exhaust-valve depends on the closing of the pressure-valve, and the pressure-valve cannot open until after the exhaust-valve has closed; so that it is impossible for either valve to be open except while the other valve is closed.

Johnstone's Engine.

This engine is illustrated in Fig. 104, which is a sectional elevation. A is the pressure cylinder, B the pump-barrel, C the pressure piston, D the pump-piston, P piston-rod. The casings E and E contain the A and B, and are held together by means of four strong bolts. The lever L gives motion to the rod R, which actuates the auxiliary valve on one side; the other side is the same, the tappet being knocked by the pump piston, causing the pressure to pass to either side of

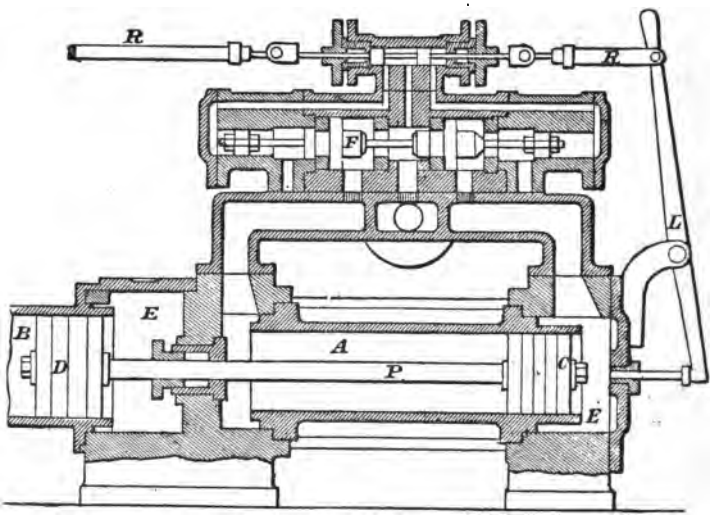

Fig. 104.

the main piston-valve F. The larger diameter of the valve F acts as clacks, and the smaller as piston-valves. The exhaust from the engine is discharged along with the delivery from the pump without requiring to go through the pump; this being the usual arrangement for the direct-acting water-pressure pumping engines.

CHAPTER XVIII.

ROTATIVE WATER-PRESSURE OR HYDRAULIC ENGINES.

THESE engines are in action exactly similar to the steam engines, with fixed cylinders, connecting-rods, crank-shafts, and fly-wheel, but there is no lap on the slide-valve.

LORD ARMSTRONG'S ENGINE.

Lord Armstrong is the inventor and patentee of many different arrangements of rotative water-pressure engines. The first was a double-cylinder engine, the two cylinders being fixed on an A frame, the centre lines of the cylinders forming an angle of 90°, and each cylinder containing a water-tight piston. The piston-rods worked through glands and stuffing-boxes in the back covers of the cylinders, and were connected with cross-heads sliding in motion-bars, secured to the covers at one end and the bed-plate at the other. The crank-shaft was fitted with a fly-wheel. The connecting rods, one of which was fork-shaped, having the cylinder contained within the fork, the other connecting consisted of single bars placed one at each side of the cylinder. The slide-valves were actuated by eccentrics and rods from the crank-shaft. The valve-chests were placed one on each side of the bed-plate perpendicularly under the centre of the crank-shaft.

At first his lordship experienced a great difficulty by the concussion of the water at each reversal; this he overcame by a very ingenious arrangement of relief-valves, which are

illustrated in Fig. 105 and Fig. 106, Fig. 105 being a section through the water-passages and relief-valves, and Fig. 106 a section through the relief-valve box, showing how the valves are connected with water-passages. A and A are the passages in connection with the top and bottom cylinder pressure-ports; B the escape or discharge passage, common

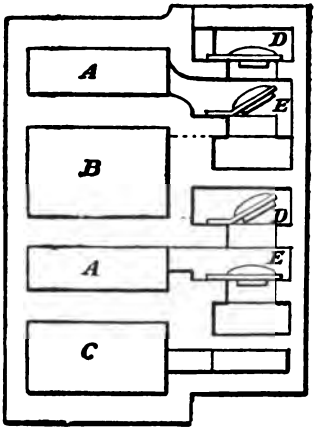

FIG. 105.

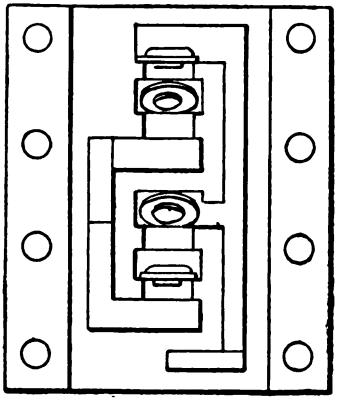

FIG. 106.

to both valves; C is the supply or pressure-passage, also common for both valves. A set of these relief-valves was fixed against the side of the water-passages in connection with each slide-valve. The use of these valves is to supply the want of elasticity in the impelling or pressure-water and their action may be described in the following manner:—

It will be observed that at the moment when each slide-valve covers the cylinder ports, the piston (in the absence of the relief-valve) would be prevented from continuing its course by the non-elasticity of the water without lifting the slide-valve from its face, which would cause not only a grea

shock upon the engine but also a considerable escape of water from the valve-chest into the escape or eduction passages. At the same time also, while the water would be thus locked up on one side of the piston, its admission would be cut off from the other, so that while the water was being injuriously expelled on the one side by the progress of the piston avoid would be left on the other, which would tend to hold back the piston. Both these evils are remedied by the relief-valves in the following manner:—

By tracing the connection of the passages it will be seen that the clacks D and D have the pressure of the impelling water constantly acting to keep them closed, and that the other clacks E and E communicate on the other side with the escape water. It is obvious, therefore, that at those points of the stroke, when the egress-ports become closed by the slide-valve, and when the pent-up water on the escape side of the piston would present an unyielding resistance to the motion, the clack-valves D and D will yield to the superior pressure of the escape water on the under side, and for an instant allow it to re-enter the supply-pipe, thus relieving the engine from the shock it would otherwise sustain, without involving any sacrifice of power, inasmuch as the small quantity of water thrust back into the supply-pipe at the expense of the engine acts again upon the piston on the opening of the ingress-port, and so gives back the power expended upon it. It will also be observed that the clacks E and E must always rise when the ingress-ports are closed by the slide-valve before the complete termination of the stroke, and thus the tendency to form a vacuum behind the piston, which would have the effect of retarding the engine, is avoided. In order still further to soften the action of the engine, a piece of vulcanised indiarubber or other elastic substance, was fixed on each side of the piston, or at each end of the interior of the cylinder, or otherwise, in connection with the water spaces at each end of the cylinder, for by so doing it is obvious that an effect will be produced equivalent

to endowing the water itself with a considerable degree of compressibility. These engines have been made with both two and four cylinders.

Meyer's Engine.

The principal advantage claimed for this type of water-pressure engine consists in that the supply of pressure-water can be cut off before the piston has arrived to the end of its stroke. This engine is illustrated in elevation, Fig. 107, and sectional plan, Fig. 108. A is the pressure cylinder;

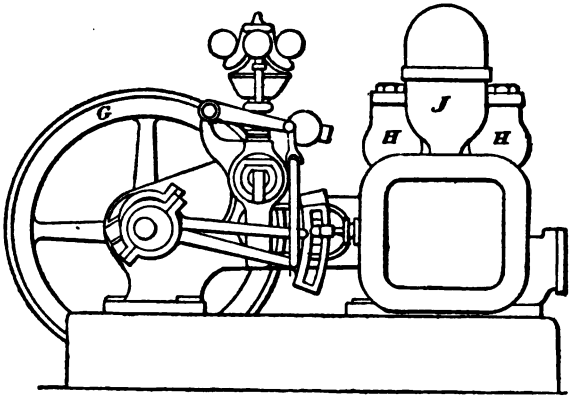

Fig. 107.

B, the pressure-piston; C, the piston-rod; E, the slide-valve, connected to the crank-shaft F by means of a spindle, two eccentric-rods, two eccentrics, and two pairs of eccentric-straps. G is the fly-wheel. The eccentric-rods are connected to the valve-spindle by means of an ordinary curved link, similar to that used for the ordinary How's link-motion, better known as the Stephenson link-motion; the link being coupled to a lever, raised and lowered by the governor. The cylinder was provided with two air-vessels

H and H, one at each end of the cylinder-barrel, the air contained in each being compressed to the initial pressure at the end of each stroke; hence, the water entering the cylinder meets an elastic cushion, which entirely dispenses with shocks. The slide-valve E is balanced, by working between two surfaces of exactly the same shape, the back plate having recesses formed equal to the pressure and eduction-ports in the valve-face of the cylinder. The inlet and discharge-passages pass through the slide-valve E, so as to give a large admission area, besides relieving the valve of the pressure, which is, of course, very large when working with great pressures, so usual in towns where water distribution is

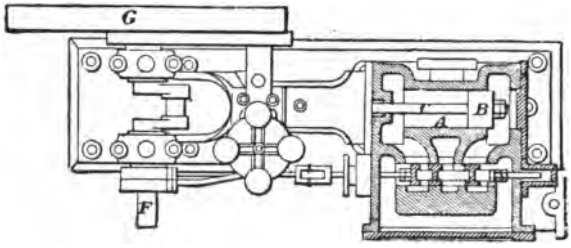

FIG. 108.

carried out, which pressures are usually 700 to 1500 lbs. per square inch, and in some cases even more. The air-vessels H and H are supplied with air by means of snifting-valves, one on each air-vessel, so that when the pressure in the cylinder sinks below the atmospheric pressure air is admitted into the vessels at each stroke. On the top of the air-vessels are fitted relief-valves, adjusted so that should the air-pressure become greater than that of the pressure-water, the air will escape through the valves; but instead of the escaping air being lost it is forced into the main air-vessel J, placed on the top of the valve-chest. The action of this motor is as follows:—

Let us suppose that one of the air-vessels, H, is full of

air at the same pressure as that of the drive or pressure-water, then the slide-valve E is opened, water is consequently admitted into the pressure cylinder and the piston makes its stroke; on the return exhaust-stroke the pressure sinks below that of the atmosphere. Before the piston has finished the return stroke the exhaust is cut off, and the air in the cylinder is compressed until it is reduced to the same volume as that of the air-vessel H. This compression is lost work, hence reduces the efficiency of the engine; but when the engine cuts off before the end of the stroke, the water doing its work at the constant pressure till it is cut off, after that the compressed air expands, giving out the power previously absorbed in the compression. From the above it will be seen that this is a combined air- and water-pressure engine.

JASPER'S ENGINE.

This arrangement consists of a pair of engines placed side by side, with the two cranks placed at an angle of 90 degrees to one another; the two water-pressure cylinders and the valve-chests are surrounded by an air-vessel, to prevent sudden changes of the pressure in the valve-chests. The cylinders are lined with bronze and the pressure-pistons are packed with cup-leathers, and bronze washers between the cup-leathers. The admission valves are of the piston type, worked by eccentrics and rods from the crank-shaft. The valve-chests communicate in the middle with the air-vessel and the ends of the chests are open to the discharge or eduction-pipe. The bored part of the valve-chests are also lined with bronze, furnished with inclined slots for the admission and discharge passages. The piston-valves are furnished with cup-leathers and bronze washers, similar to the pressure-pistons.

CHAPTER XIX.

OSCILLATING WATER-PRESSURE ENGINES.

THE engines of this class are worked on the same principle as the old marine engines, the cylinders in most cases being furnished with trunnions at each side, in the centre of their length.

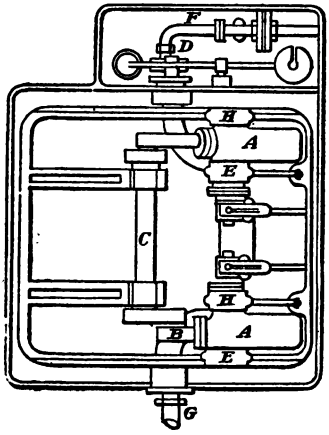

FIG. 109.

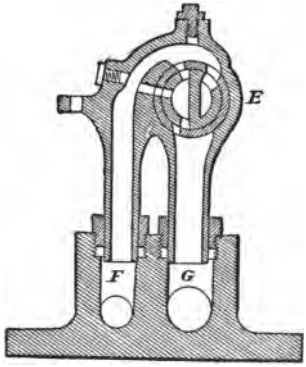

FIG. 110.

LORD ARMSTRONG'S ENGINE.

This engine is oscillating, double cylinder, with the two cranks placed at an angle of 90 degrees to one another. Fig. 109 is a plan, and Fig. 110 is a section through the

trunnion working valve. A A are the two oscillating pressure-cylinders working on the trunnions H H. The cylinders are of the piston and plunger type, the pressure area on the plunger side being half of that of the back side of the piston. The trunnion valves E E are so arranged that there is a constant admission of the pressure to the small area of the piston, and the back end of the pistons receive the pressure and exhaust periodically, as in the ordinary water-pressure engines. C is the crank-shaft; D, a relief-valve, to prevent shocks and sudden rise in the pressure-main; F is the pressure-main, and G the discharge-pipe.

Three-Cylinder Engine.

An oscillating three-cylinder water-pressure engine is illustrated in elevation, Fig. 111, plan, Fig. 112; and en-

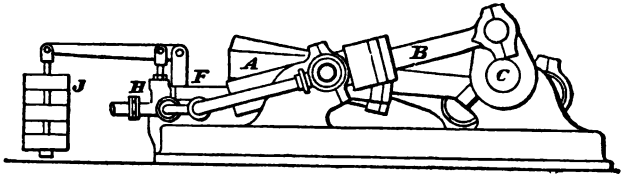

Fig. 111.

larged sectional elevation of the valve-chest, slide-valve and relief-valve, Fig. 113. A A A are the three oscillating cylinders, which are of the single-acting ram type, B B B being the three rams or plungers; C is a three-throw crank-shaft of the bent wrought-iron type; the ends of the rams, which couple to the crank necks are fitted with gun-metal steps. The plungers are turned and the cylinders bored to fit the plungers the whole of the length; D and E are the trunnions, the trunnion E being hollow for the admission and discharge of the water; F F F are the three valve-boxes; G is the pressure-pipe; H relief-valve; and J the weight.

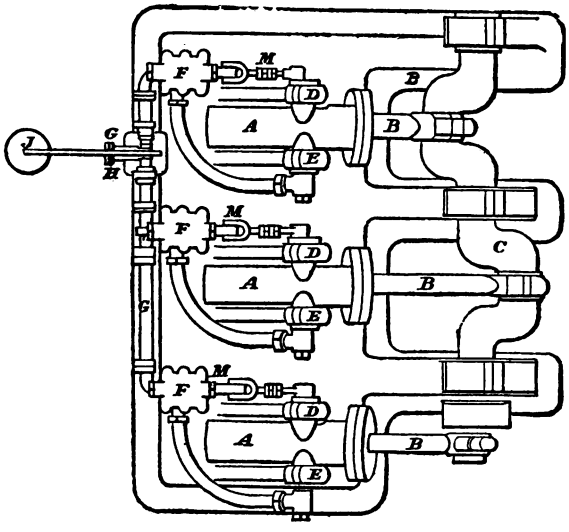

FIG. 112.

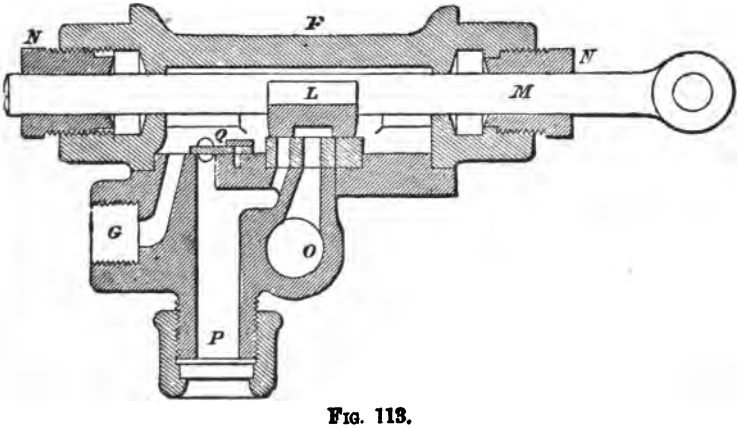

FIG. 113.

D are the solid trunnions fitted with crank-pins for working the valve-spindles by means of rods furnished with adjusting nuts. In Fig. 113, L is the slide-valve; M the valve-spindle, working through a screw-gland and stuffing-box N; P is the port leading to the pressure-cylinder; O the discharge-pipe; Q the relief-valve preventing shocks in the cylinder, this being made of the leather clack type.

SCHMID'S ENGINE.

nder oscillating type and is illus-
tion Fig. 114, plan Fig. 115, and
e centre of the cylinder, Fig. 116.
a cylindrical face and oscillates from
of the face, the bed-plate B being
kes the place of a slide-valve; C and
in the cylinder; E and F the cor-
bed-plate B; and G is the discharge
A is of cast iron, closed at the end
by a cover, furnished with a gland
box G, which latter acts as a guide
On each side of the cylinder are
om which the oscillation takes place;
heir bearings in the two levers N and
at one end to the bed-plate B, near the
r end of the levers can be pressed down
rs by the hand-wheels P and Q, so as to
e tight against the bed-plate B, and by
rs the cylinder face can be lubricated.
lever in which the trunnions work are
al bushes. In the small sizes of these
R are made solid, as shown in illustration
rger sizes have the pistons furnished with
air-vessel, of a capacity of from two to two-
the contents of the pressure cylinder, is

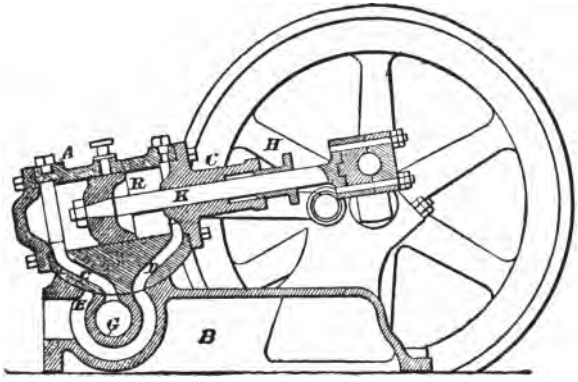

FIG. 114.

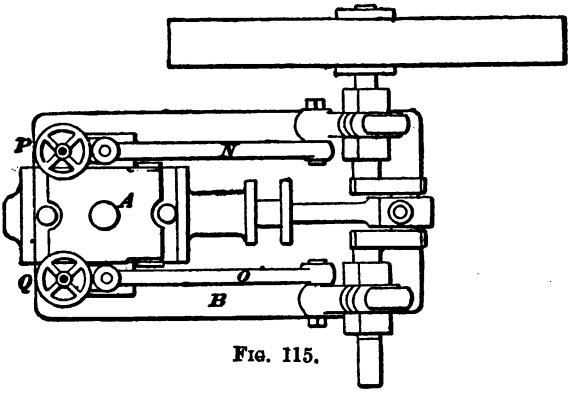

FIG. 115.

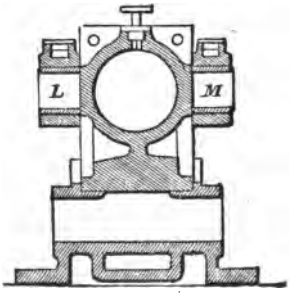

FIG. 116.

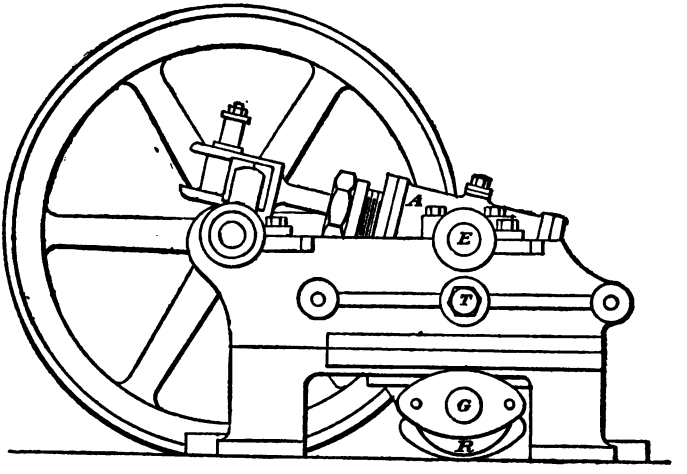

Fig. 117.

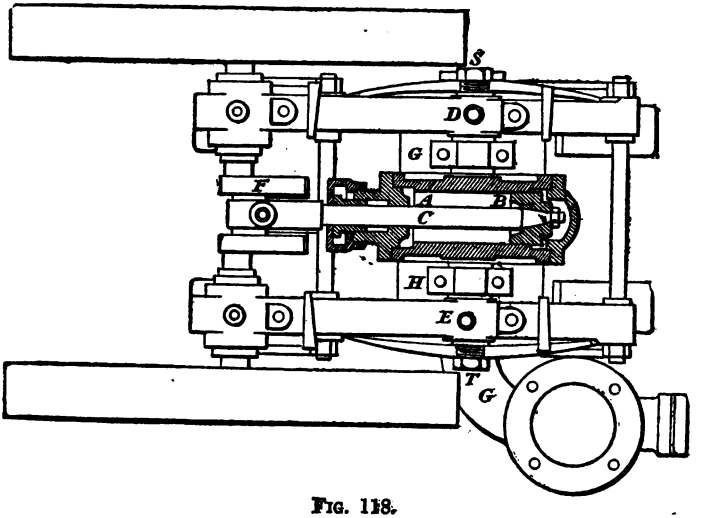

Fig. 118.

usually connected to the motor, and for the large sizes an air-charging apparatus is fitted to the air-vessel to supply air, as the latter is absorbed by the water.

Wyss and Studer's Engine.

Fig. 117 is an elevation, Fig. 118 a part sectional plan, Fig. 119 a section through the centre of the cylinder, and Fig. 120 a section of one of the valve-chests. This engine is, like Schmid's, of the single-cylinder type, but the valve-faces are flat, instead of radial. A is the pressure-cylinder, B the

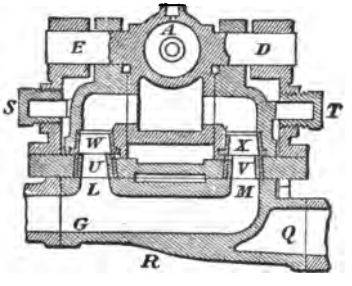

Fig. 119.

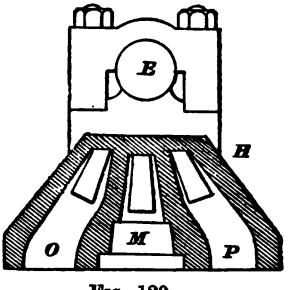

Fig. 120.

pressure-piston, C the piston-rod. The cylinder A is furnished with two trunnions D and E, one on either side. The piston-rod is coupled direct to the crank-shaft F, the rod end being fitted with gun-metal steps, adjusted with a gib and cotter. There is one valve-chest G and H, on each side of the cylinder attached to the bed-plate, furnished with main inlet or pressure-pipe G; L and M are the ports leading to the cylinder; in the latter there are two ports on each side, one pair leading to each end of the cylinder. O and P, Fig. 120, are the discharge-passages, and Q the discharge-branch. There is one great advantage in admitting the pressure-water simultaneously on both sides, namely, that there is no one-sided

strain. The bottom casting R can be turned round an angle of 180°, which is very convenient, in many cases, for fixing the pressure and discharge-pipes. The valve-chests are set up to the working faces, as they wear, by means of the two adjusting plugs or screws S and T. U and V are two taper gun-metal bushes in the bed-plate, fitting into two pipes W and X, bored taper, fitted into the valve-chests; by that means a perfectly water-tight joint is made between the bed-plate and the valve-chests.

Haag's Engine.

This engine is of the single cylinder oscillating type, having its pressure and discharge ports arranged in the trunnion on a somewhat similar principle as Lord Armstrong's double-cylinder oscillating engine, Fig 109, p. 158. Fig. 121 is a sectional elevation, and Fig. 122 a sectional plan.

It will be seen by referring to the illustrations that Mr. Haag has followed the example set by Messrs. Wyss and Studer, and admits and discharges the water from both sides of the pressure cylinder at the same time.

A is the pressure-cylinder; B the pressure-piston, the latter being made of gun-metal and packed with cup-leather; C is the piston-rod, coupled direct to the crank-shaft D, the end being fitted with gun-metal steps; the end is also arranged as a cross-head guided in a pair of slide bars, cast in one with the cylinder A, to relieve the stuffing-box R and gland S from lateral wear and tear. E and F are the pressure-ports, leading to the front end of the cylinder, and G and H leading to the back end of the same, all the four ports passing through the trunnions J and K, on which the cylinders oscillate. L is the pressure inlet-pipe, and M the discharge-pipe. The trunnions J and K work in gun-metal bushes N and O, the pressure-water passing through these bearings into the trunnions; the

water is prevented from escaping at the end of the trunnions by the plates P and Q. The bearings for the trunnions are formed in the bed-plate T, and furnished with adjustable caps U.

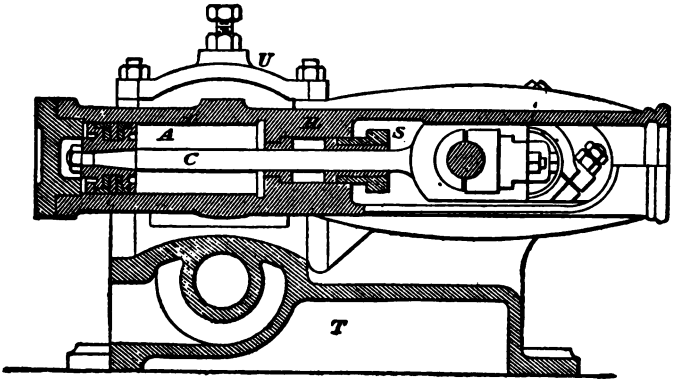

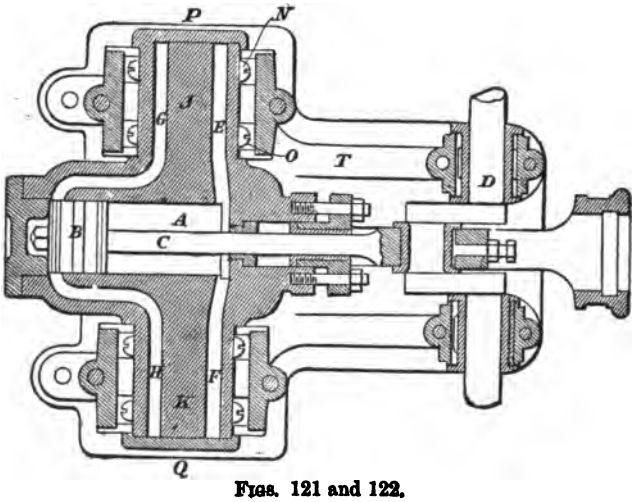

Figs. 121 and 122.

Ramsbottom's Engine.

In this engine the three plungers are arranged to work on a three-throw crank-shaft, the throws of which are placed equidistant from one another, the cylinders oscillating on a hollow trunnion, fixed at the lower end of two frames. The trunnion is divided into two parts longitudinally, one for the pressure- and the other for the discharge-water. The cylinders are secured in position on the trunnions by two bolts for each cylinder, with tension springs to ensure water-tight joints. The rams are provided at their lower end with leathers. There is a port at the bottom end of each cylinder and two ports in the upper side of the trunnion for each cylinder, so that as the cylinders oscillate the ports come alternately opposite the pressure and discharge-passages in the fixed trunnions, and when one plunger has full pressure it is forced upwards; there is always one plunger open to the discharge port; there is no dead point at any part of the revolution.

Ramsbottom's Engine.

This engine differs from all the engines we have so far examined, inasmuch that in this case the three rams are working on to one central crank, shown at C, illustration Fig. 123, which is a sectional elevation; A, A, A are the three plungers, or rams, working in the three pressure cylinders B, B, and B, oscillating on the pivots or trunnions D. The plungers A, A, and A work through stuffing-boxes H and glands G. The pressure and discharge port E is placed at the bottom end of the cylinders B, B, and B, these ends being curved to a radius struck from the trunnions D, and fitting water-tight against corresponding curved faces in the engine-frame J. K is the water-pressure inlet, leading through the engine-frame to port L, and exhaust through the port M, at the end of the frame, and ultimately discharge through the pipe N. By reversing the

valve O by the handle P, the pressure ports are converted into discharge, whilst the main pressure- and discharge-pipes are unaltered.

The action of this water-pressure engine is as follows:—

The water being admitted through the pressure-pipe K finds its way to the port L in the engine-frame J, and passes into the cylinder A through the port E, drives the plunger B, which cannot travel without turning the crank C; when that ram has arrived at the end of its stroke the next plunger is in action, and oscillates the first cylinder so that

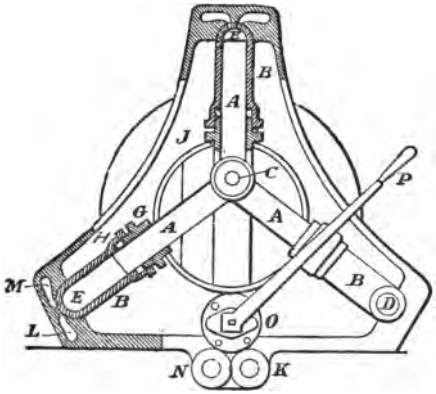

FIG. 123.

the water contained in it passes out of the cylinder port E into the discharge passage M, and flows out of the main discharge-pipe N. The cylinders being three in number there is an impossibility for any dead point to exist in these engines, and the motion is steady and uniform.

HASTIE'S ENGINE.

The Hastie engine is in every way similar to Ramsbottom's, as will be seen from the illustrations, except that Mr. Hastie has added an arrangement for varying the length of the stroke automatically, which admits of this engine

being worked automatically. To accomplish this there is, instead of the ordinary crank used by Mr. Ramsbottom, a crank-disc fitted with a sliding block, the latter being furnished with a crank-pin. There are two types of the variable motion; for low pressures it is acted on by springs but for high pressures hydraulic cylinders are used.

Illustrations—Fig. 124 is a sectional elevation; Fig. 125 a cross-section, when springs are used; Fig. 126 enlarged view of casing, when springs are employed; Fig. 127 front

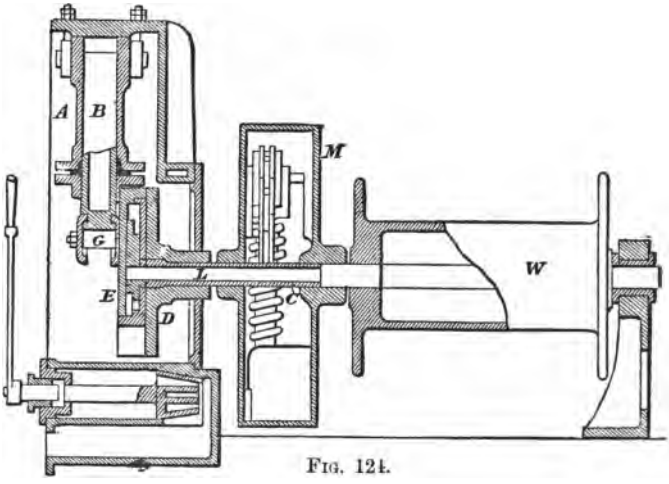

FIG. 124.

elevation of crank-disc; Fig. 128 plan of crank-disc; Fig. 129 section through the disc, showing cam-motion; Fig. 130 a cross section of engine when hydraulic cylinders are used; and Fig. 131 front view of casing, showing the hydraulic cylinders.

B B B are the three pressure cylinders; A A and A the three plungers; C the crank-shaft; D the crank-disc, in which slides the block E and a setting-up piece F, for taking up any wear which may take place; G is the crank-pin, to which

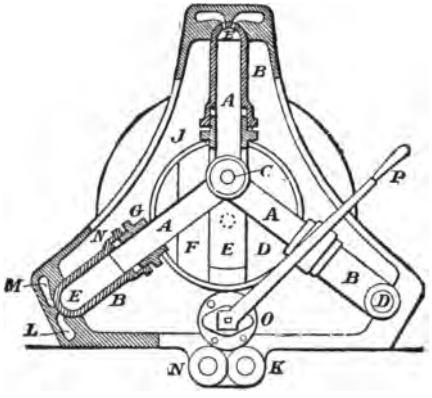

FIG. 125.

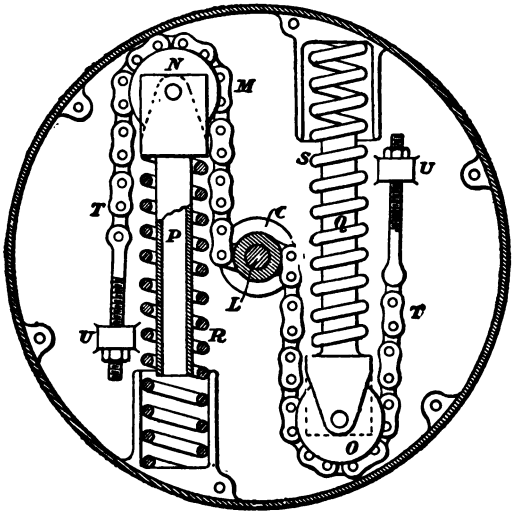

FIG. 126.

the three plungers are coupled. On the back of the slide-block E, revolving on pins projecting from it on either end, are two small rollers H and J, which run on the circumference of a peculiarly shaped cam K. The cam is keyed to the shaft L, passing through a hollow shaft C, carrying the crank-disc D. Supposing the shaft L to be held fast, while the hollow shaft C and crank-disc D revolve, the block E will be displaced radially by the cam K, and with it the crank-pin G, thus altering the stroke of the piston. The hollow casing M is keyed on to the spindle L, and runs loose on the hollow shaft C; within the casing are two rollers N and O, carried in forks at the end of the hollow rods P and Q. The rods P and Q, with the rollers, are pressed upwards towards the circumference by helical or spiral springs R and S, while over each roller passes a chain T, one end of which is attached to a snug U, projecting from the side of the drum casing, the other to the hollow shaft C.

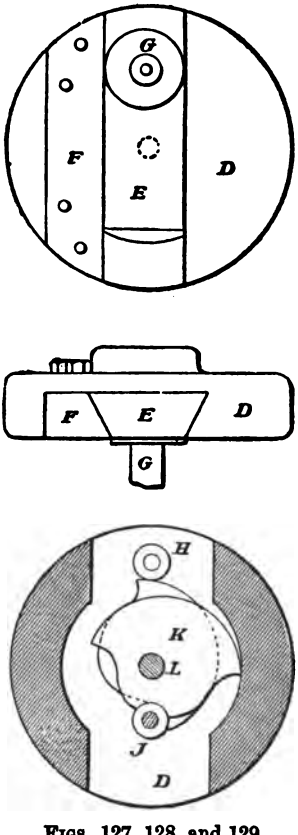

FIGS. 127, 128, and 129.

The action of this gear is as follows: — Supposing the pressure water is admitted into the cylinder the crank-disc D begins to revolve, and with it the hollow shaft C, while the shaft L carrying the cam K is held fast by the

resistance of the load applied to the drum W. The result of this is that the chains T are wound up on the hollow-shaft C; at the same time, owing to the motion of the crank-disc D relatively to the cam K, the block E with the crank-pin G is pushed outwards, and the stroke is increased.

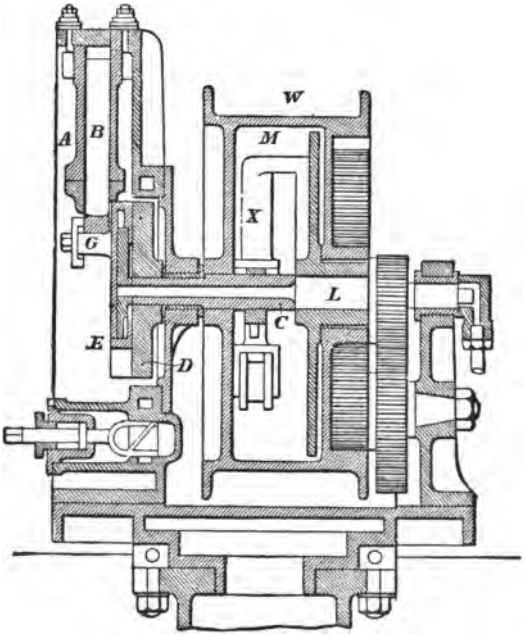

FIG. 130.

The winding up of the chain compresses the springs R and S, and this compression, and the simultaneous increase of the stroke, go on until the resistance of the springs balances that of the pulley, when the latter is driven round and a state of equilibrium established, which lasts as long as no change occurs in the load or pressure. If the load is

increased, a motion of the crank-disc D, relatively to the cam K again takes place, until the turning moment on the crank equals that of the load on the drum W, by the alteration of the crank-radius.

When the engine is worked with a very high pressure the arrangement illustrated in Fig. 130 and Fig. 131 is employed. In such cases, instead of the two springs R and S two hydraulic rams X and Y are substituted. The two rams are connected with the supply-pipe through the

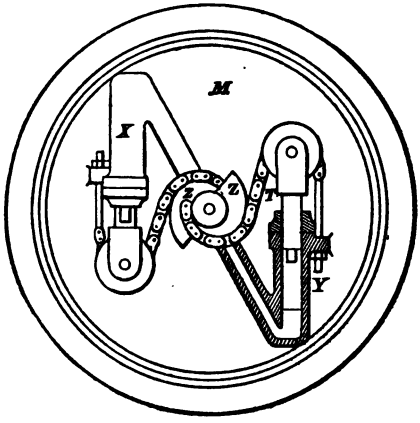

FIG. 131.

centre of the shaft L, and are consequently under the same pressure as that used to work the engine. The chains T act in the same manner as when the springs R and S were used, but instead of being wound directly on the hollow shaft C, they are wound on cams Z; in this way greater power is required to force back the rams X and Y in proportion as the chains T act at an increasing distance from the centre of the shaft C.

Brotherhood's Three-Cylinder Engines.

These engines belong to the fixed three-cylinder engine type, as will be seen from the sectional elevation, Fig. 132, and cross-section, Fig. 133. A, A, and A are the three pressure cylinders cast in one with the engine body B; C, C, and C are three deep pistons coupled to the crank-shaft F by the connecting-rods E, E, and E, the one end of which that goes into the piston is ball-shaped, the other end is

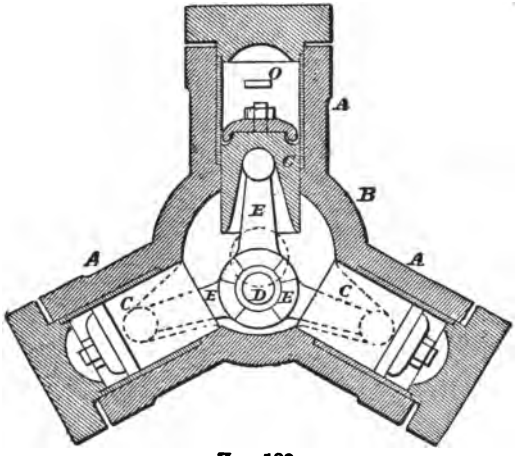

Fig. 132.

hollowed to fit round part of the circumference of the crank-pin D. One side of the casing is furnished with a cover G, which also carries a bearing for the crank-shaft, and a foot for bolting it to the bed-plate J; the other end of the shaft is carried in the bracket H. J is the bed-plate on which the engine rests. The other cover K of the body B of the engine is also furnished with a foot for bolting to the bed-plate; the centre of the cover K forms the valve-box containing the valve L, which is rotary. The valve L is shown

in section, Fig. 133, and elevation, Fig. 134. It is made of phosphor-bronze, and is revolving in the valve-chest by means of a small crank M driven by the crank-pin D, and square on the end of the crank M, fitting into the valve L. In the cover are three passages, leading from the valve face N to the passages O, in the body of the engine, to the three cylinders, A, A, and A. The valve L, in the position shown

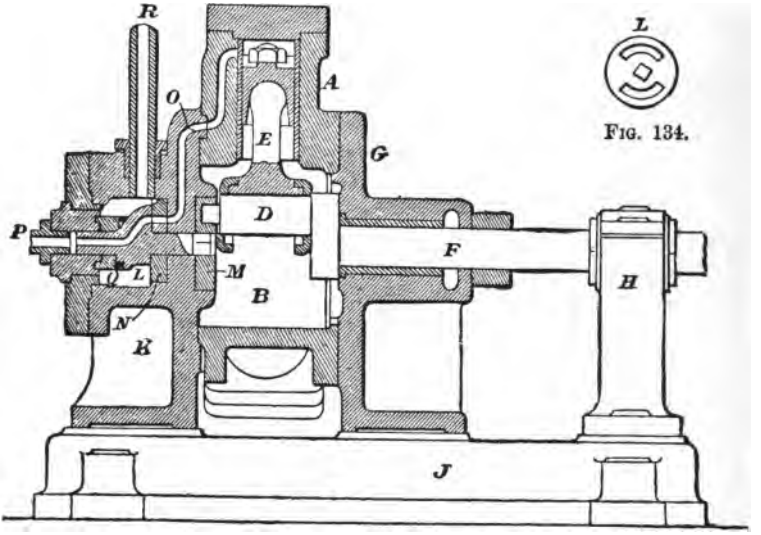

FIG. 134.

FIGS. 133 and 134.

in Fig. 133, is exhausting, from the top cylinder, through the port O, the passage in the valve, and the discharge-pipe P. Q is a balance-ring on the back of the valve L, to reduce the pressure. R is the main pressure-pipe. These engines have no dead-point, there being three cylinders placed equidistant from each other. The pistons C, C, and C are packed with hydraulic leathers, and the cylinders A, A, and A are lined with gun-metal.

Rigg's Four-Cylinder Engine.

A diagrammatic section of this engine is given in Fig. 135. It consists of four cylinders, A, B, C, and D, which revolve freely and independently about a trunnion common to them all. The cylinders are single-acting, and have at their lower

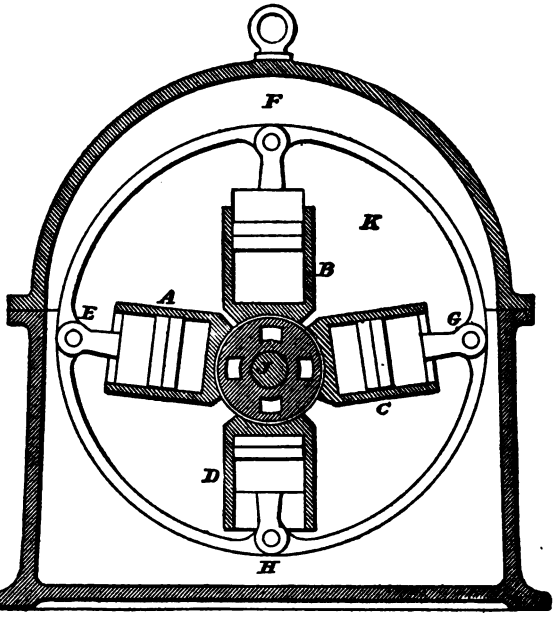

Fig. 135.

end a boss with flat faces, through which the trunnion passes, and each is arranged so that its faces fit accurately against those of the next boss; these bosses contain ports for the passage of the pressure water, on its way to the cylinder. The pistons are connected, through the piston

rods, to their respective crank-pins E, F, G, and H, equidistant from each other, attached to a disc K, keyed on to the main engine-shaft J. The disc is eccentric with the centre of the engine-shaft, but the axes of both are parallel, therefore, when the disc revolves, so must also the cylinders, but about another centre, and it is clear that to allow this movement every piston must reciprocate relatively to its cylinder, although both have absolutely only a small rotary motion. In principle, the result is the same as though the engine worked in the usual manner on a crank of a radius equal to the eccentricity of the two centres, that is of the crank-shaft and the trunnion, the trunnion taking the place of the crank-pin; but as the cylinders and pistons are respectively balanced among themselves, the effects resulting from the unbalanced dynamic action of reciprocating masses in the ordinary type of engine are avoided.

The water is distributed by ports at one side of the central trunnion on which the cylinders are carried, and a fixed pressure- and discharge-valve is placed in front, in order that, as the cylinders revolve, their ports successively open to the pressure and discharge, as in any ordinary oscillating water-pressure engine of this class.

Twice the distance from the centre of the crank-shaft to the centre of the trunnion equals the length of the stroke of the engine, but when these centres are moved apart the stroke increases, and the power given out increases in the same proportion. The trunnion is made movable, in small engines by a screw and hand-wheel, but in the larger sizes an auxiliary hydraulic engine for that purpose is employed. When the hydraulic engine is employed for altering the stroke, a centrifugal governor is used for regulating the admission and discharge.

The auxiliary engine has two rams of unequal diameter opposing each other, and carrying in a slide between them the central trunnion on which the cylinders A, B, C, and D revolve. A constant pressure is maintained in one direction

by the smaller ram, but admission and discharge from the larger ram are controlled by valves travelling with it, so that they become self-closing. Pressure admitted upon the large ram overpowers the small one, and causes a movement in one direction, while opening the large ram to discharge allows the small ram with its constant pressure to move the trunnion in the opposite direction, and when both valves remain closed the trunnion is firmly held at any point; thus the stroke of each plunger of the main engine is effectively regulated to suit any particular requirement.

These engines are capable of running at a very great speed.

CHAPTER XX.

ROTARY WATER-PRESSURE OR HYDRAULIC ENGINES.

THERE is scarcely any difference between the impulse turbine and the rotary water-pressure engine, except that the former are generally larger, and the latter not as economical as the turbines.

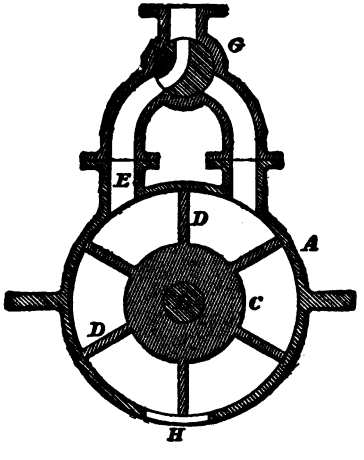

FIG. 136.

Fig. 136 is a sectional elevation of the simplest form of rotary water-pressure engine, not to be recommended, except where a plentiful supply of water can be had at a cheap rate, as, for instance, where a mountain stream is running to waste.

In the illustration, A is the body of the engine, furnished with a central shaft B, on to which is keyed a drum C, having six vanes or paddles D; E and F are two inlet-pipes, and G the admission-valve; H is the discharge-pipe. The water enters into the figure through the valve G, down the pipe E, strikes the vanes and causes a rapid rotation of the shaft. This is arranged for reversing by means of the valve G. When there is no necessity for reversing the engine, only one inlet-branch and an ordinary two-way-cock is required.

Lord Armstrong's Rotary Engine.

This engine consisted of a wheel with a flat rim, containing four equidistant pistons folding into circular apertures, and intersecting longitudinally a curved tube open at the lower end, and communicating at the upper end with the supply-pipe. The pistons open out as they enter the tube, and fold up on leaving it, and each piston takes the pressure of the column before the preceding one loses it. The opening and closing of the pistons in the order required is effected by external cams and slides giving motion to the pistons through the axles on which they turn.

Pitman's Rotary Engine.

This engine the makers call the "*Demon*" water motor. It is illustrated in sectional elevation Fig. 137, part sectional end view Fig. 138, and Fig. 139 enlarged view of the double nozzle. A is a disc, furnished with a series of small buckets or cups B, attached near to the periphery on each side of the disc in a *zigzag* fashion. The disc A is keyed on to a spindle C, which latter is carried between two adjustable centres D and E, the adjustable centres being carried in the brackets F and G, which are bolted to the casing H, one side of the casing being closed by a cover

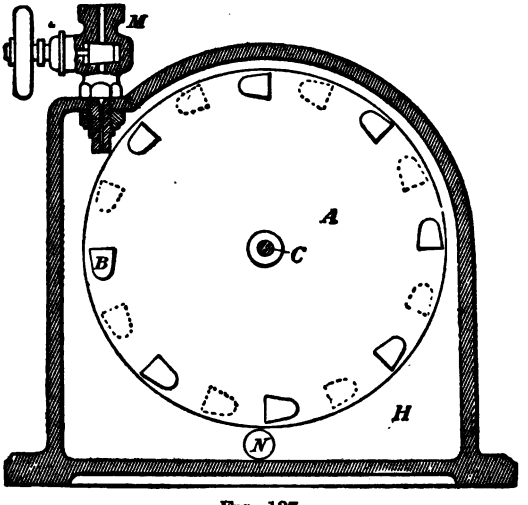

FIG. 137.

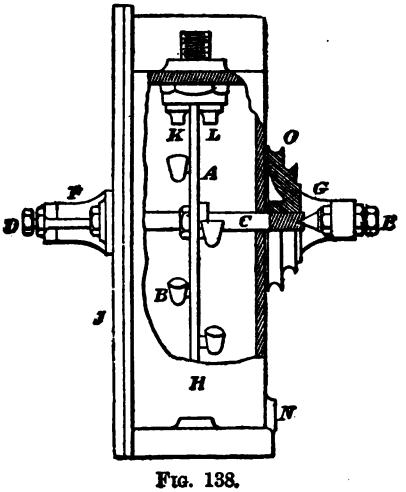

FIG. 138.

or door J. K and L are the two nozzles, through which the pressure-water is admitted on to the buckets B, the supply being regulated by the valve M. The two jets are arranged to impinge against the buckets, causing the disc A and the spindle C to rotate, the water after leaving the buckets escaping through the discharge-pipe N, at the bottom of the casing H. The power is taken from the V groove pulley O, keyed on to the spindle C, as illustrated; but of course plain pulley or gearing can be used if preferred.

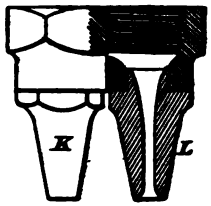

FIG. 139.

ESCHER, WYSS & Co.'s ROTARY ENGINE.

Fig. 140 is a sectional elevation, and Fig. 141 a cross-section of an engine of this type. It very much resembles an impulse turbine. The wheel A consists of a disc with open buckets cast upon it, and revolves between two stationary shrouds B and C, surrounding the back and sides of the vanes, the shrouds being secured to the sides of the casing D. The shaft or spindle passes through the shrouds and revolves in the bearings E and F, and is, therefore, protected from contact with the water. The water enters the admission-pipe G through a rectangular orifice formed by a fixed channel and a movable flap-valve H, which oscillates on the pin J, and by its position regulates the outflow of the water according to the work thrown upon the wheel. This regulation is effected automatically by means of the governor K, the base of which is fixed on the top of the wheel-case. The governor sliding bush is connected to the lever L M, the fork L of which embraces the spindle N, which rises with the counterpoise of the governor. The fulcrum O, of the lever L M, is adjustable on a fixed rod

P, so that the amount of rapidity of the movement of the spindle N can be regulated. The end of the spindle N is pointed, and forms a valve Q for opening or closing a small port R. The flap-valve H has an arm on it which embraces

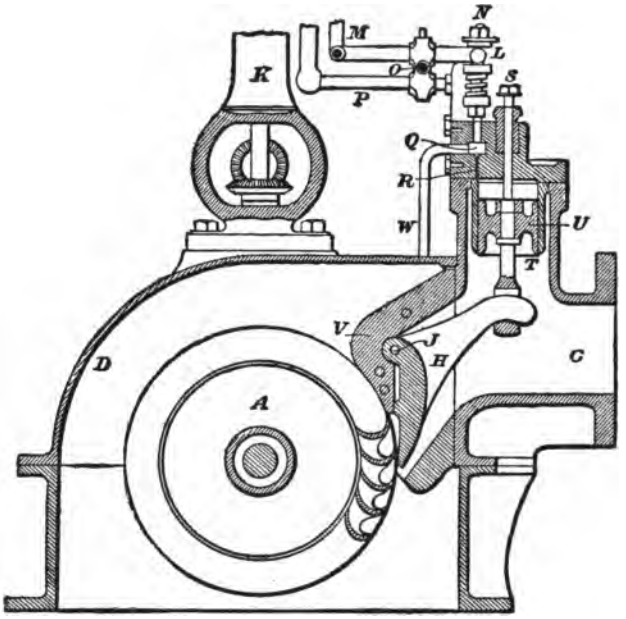

FIG. 140.

the rod S T, which carries a piston U, having always the pressure of the drive-water on it as it flows to the engine, and while its upper side stands under the pressure on the cylinder, the pressure of the water on the flap-valve tends to open the outlet orifice to the maximum extent at which it is intended by the stop V; the pressure on the piston, on the other hand, tends to close the orifice. The cylinder communicates constantly, through the passage W, with the

water under pressure, and when the small passage R is closed by the valve Q, the pressure in the cylinder will become equal to the latter, and the piston becomes balanced, so that the flap-valve H will be opened. This takes place when the counterpoise of the governor, in consequence of a reduction of speed, drops below its mid-position, a spring

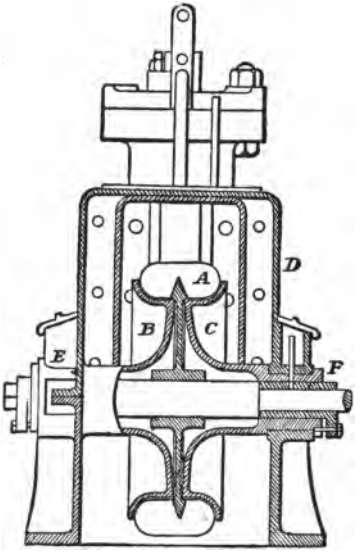

FIG. 141.

placed between collars on the spindle N allowing a further downward motion of the fork after the valve Q has closed. When, on the other hand, the governors rise, the spindle N is lifted, and the valve Q opened; the cylinder then communicates, through the small passages, with the tube open to the atmosphere, so that the upper side of the piston is relieved from pressure, and the piston is forced upwards and reduces the orifice.

CHAPTER XXI.

GENERAL REMARKS AND RULES FOR WATER-PRESSURE ENGINES.

The modulus of hydraulic or water-pressure engines is, according to Mr. Henry Davey, in large engines 85 per cent., medium sizes 80 per cent., and small sizes 75 per cent. M. Arthur Morin gives an average of 70 per cent.

The quantity of water that can be raised by a given quantity of drive-water equals the quantity of drive-water multiplied by the height of the drive column, divided by the height to which the water has to be raised multiplied by 0·70, or whatever the modulus of the engine used may be.

The useful effect of an engine will be found by multiplying the quantity of water used by the head of the drive-column, and dividing that by the quantity of water delivered multiplied by the height to which the water is delivered; the result being the useful effect of the engine.

The velocity for a given flow of water varies inversely as the area of the pipes and passages; the friction of water in pipes and passages varies as the square of the velocity; and the work performed in overcoming it as the cube of the velocity, other things being equal; hence, water-pressure engines should be made as large and their speed as slow as is consistent with economy of first cost.

The length of the stroke should be as great as convenient, so as to reduce the number of reversals to a minimum, on account of the loss of the acquired energy to the drive-column being arrested at the end of each stroke.

M. Arthur Morin considers a good proportion of the length of the stroke to the diameter of the pressure-cylinder to be 4 to 5 to 1.

The speed of water-pressure engines varies considerably; large engines with long stroke can be run at a much greater speed, say up to 100 to 120 feet per minute; the usual speeds for the smaller sizes are from 45 to 50 feet per minute.

The speed of the engine depends greatly upon the length of the stroke, and in reciprocating engines upon the number of joints and levers in the valve-gear, and the strength and rigidity of the same. The author has seen engines with the levers and rods so weak that the reversal, on account of the springing of them, has taken longer time than the travel of the piston, hence a very slow speed in feet per minute, half of the time being occupied in reversing the valves.

A great difficulty was met with in water-pressure engines in which slide-valves were employed, namely the lubrication of the valve or valves. Various metals of different degrees of hardness were tried in conjunction; also various methods of ensuring the lubrication or moistening of the rubbing surfaces; but the metals were always found ultimately to rub dry and bite or cut into one another. All this pointed to the necessity for a variety of material in the rubbing surfaces: metal upon a totally different substance. Glass was tried, but was found to wear very rapidly; at last lignum vitæ, with the end of the grain against the valve-face, was tried, and found to be the best material when working on a brass, gun-metal, or phosphor-bronze face.

For light pressures the slide-valve is undoubtedly as good as piston-valves, and cheaper. For heavy pressures an equilibrium slide-valve should be used, when the designer has to deal with engineers who have an objection to piston-valves, which is frequently the case.

The equilibrium slide-valve, illustrated in Fig. 97 and Fig.

98, is made of lignum vitæ, with the grain of the wood to the valve-face, as shown; it has two faces, top and bottom, of a rectangular shape, and the central portion, round which the hoop C and cup-leathers D D are passed, is circular; hence the valve is relieved of a pressure equal to the area of the circular portion of the valve multiplied by the working-pressure of the water in lbs. per square inch. The pressure on the corners outside the circle is sufficient to keep the working-faces of the two halves of the valve up to their work.

Piston-valves, when used, ought to be furnished with hydraulic cup-leathers, or any other class of packing appropriate to the pressure and quality of the drive-water.

The pressure cylinders and the valve-chests should always be lined with brass, gun-metal, phosphor-bronze or copper, according to the quality of the drive-water and its chemical properties.

The piston-rods and valve-spindles are usually made of Müntz metal, but when the drive-water is very acrimonious phosphor-bronze or delta-metal should be used.

There should be as few stuffing-boxes, joints and joint-pins as possible, so as to reduce the wear and tear, repacking, and general attention to a minimum, especially when the engine is placed underground in mines and collieries, where the dust and grit settle in the joints and grind away the pins, and where they receive very little attention.

The area of the ports and passages should not be less than one-tenth of the area of the pressure-cylinder; they should be, wherever possible, circular in section, as there is less friction in them than the rectangular section; the passages and ports should be as straight as possible, and when angles and curves are unavoidable they should be of a large radius, and curves should be easy; sharp elbows must never be used.

If there are any irregularities in the level of the drive-pipe or pressure-pipe, the air will accumulate at the highest

point, therefore a pet-cock, for the purpose of letting out the air, should be provided.

At the lowest place in a supply-pipe there should be provided a blow-off cock, to clear the pipe from any sediment that may accumulate at that point.

There should also be a sluice-valve at the bottom of the drive and delivery-pipes, so that when there is any examination or repair necessary there will be no need for emptying the pipes.

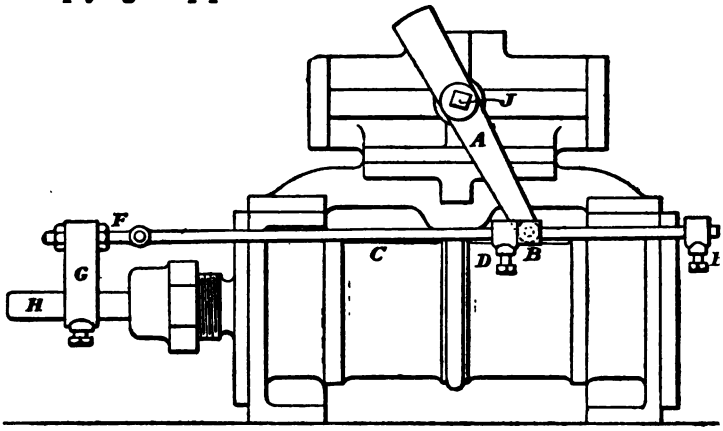

FIG. 142.

We will now examine the lever arrangement for the valve-gear of a few reciprocating water-pressure engines of different designs.

Fig. 142 is an elevation of a water-pressure engine fitted with Joy's valve-gear with a four-way-cock, as illustrated in Figs. 94 and 95 and described on page 140. The simplicity of the lever arrangement will be seen at a glance; it consists of a lever A fixed on a square J, on the end of the plug of the four-way cock; to the bottom or outer end of this lever is fitted a swivelling eye or joint B; C is a

tappet-rod, furnished with two adjustable tappets D and E; this rod is secured to the cross-head G by an eye-bolt F, provided with a nut on each side of the cross-head for adjustment; the other end of the tappet-rod C passes through the swivelling eye on the end of the lever A. The cross-head G is secured to the piston-rod H by a set-screw.

Illustration Fig. 143 shows the lever arrangement for Mr. Davey's gear, previously illustrated in Figs. 97 and 98,

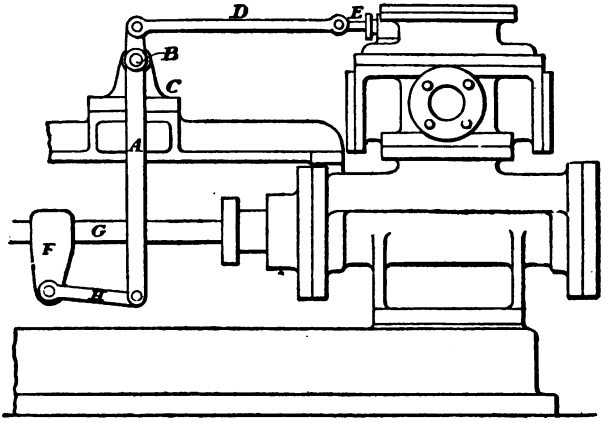

FIG. 143.

pages 145 and 146. In this, A is the main lever pivoted on the fulcrum-pin B, secured to a cast-iron girder and bracket. The bottom end is connected to the cross-head F, on the piston-rod G, by the connecting link H; the upper end of the lever is connected to the valve-spindle E by the connecting-rod or link D. It will be seen that this gear is not so simple as the Joy gear, it having more pins and levers, but it dispenses with the four-way cock, which is objectionable for heavy pressures.

The lever arrangement in Björling's gear is illustrated

in the elevation, Fig. 144, and illustrated in sections, Figs. 99 and 100; also described on page 146. A is the main lever keyed on to the spindle B; the bottom end of the lever is forked; in this fork is fitted a die, through which the tappet-rod F slides. The tappet-rod F is pivoted to the end of the cross-head G, which is secured to the piston-rod H; the other end of the tappet-rod is furnished with two tappets D and E, which can be adjusted so as to increase or decrease

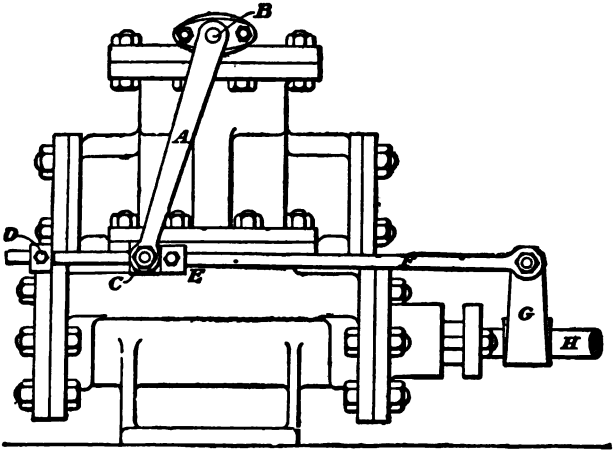

FIG. 144.

the length of the stroke, according to requirements. It will be seen that this arrangement is as simple as Joy's gear, although there is no four-way cock.

A contrast to the three gears already illustrated the reader will find in the elevation illustrated in Fig. 145. In this case there are two main levers A and A, centred on two wrought-iron fulcrums B and B; the lower ends of the levers are coupled to the tappets C and C, struck by the

piston at the end of each stroke; the top ends are coupled to the valve-spindles D and D by means of the connecting

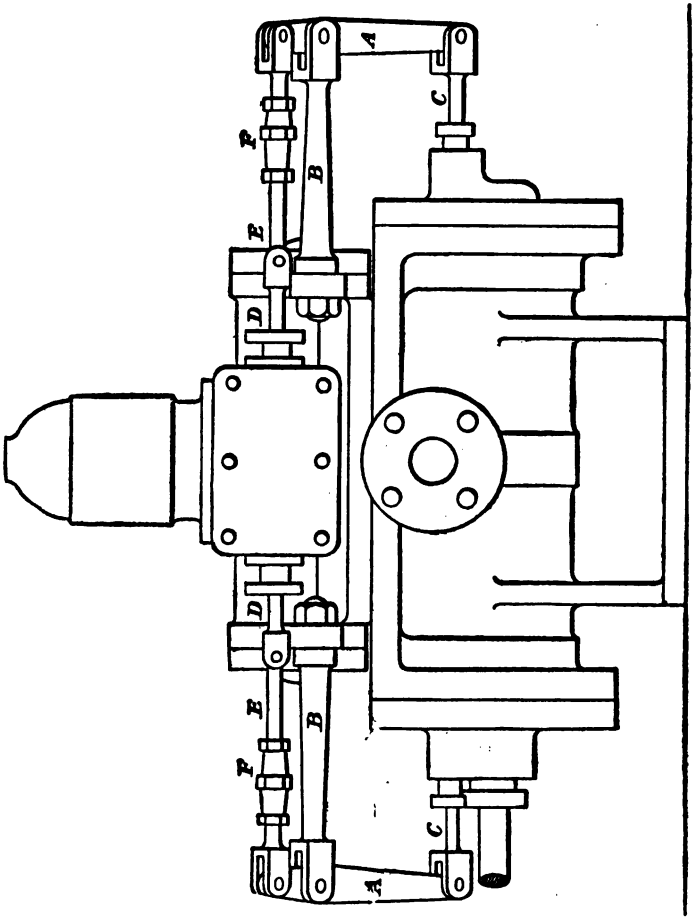

Fig. 145.

links E and E, furnished with right and left-hand screw couplings F and F. It will be noticed that in this gear

there are four glands and stuffing-boxes to keep tight, and eight pins and joints, all exposed to sand and grit.

An arrangement of a similar design and quite as complicated is the one illustrated in Fig. 104, and described on page 150.

We have yet another complicated arrangement, which we give simply to show the roundabout way which designers sometimes resort to when very simple methods can be had. This is illustrated in elevation Fig. 146, in which A is the

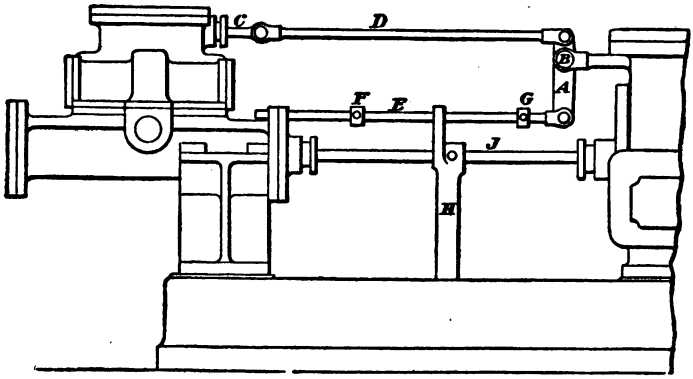

Fig. 146.

main lever, centred on the fulcrum B; the top end of the lever is coupled to the valve-spindle C by the long connecting rod D. The lower end of the lever is coupled to a tappet-rod E, fitted with two adjustable tappets F and G; this tappet-rod is actuated by the cross-head H, secured on the piston-rod J. The lower end of the cross-head H is guided in a slot in the bed-plate, to prevent it from turning round.

In former times the dip-workings in collieries and mines used to be cleared from water by means of plunger pumps, laid on an angle to suit the dip, actuated by wire ropes

over guide-pulleys, coupled to the main spears. A great deal of trouble was experienced by the constant breaking of the wire ropes, obstructing the workings. More recently the pumps were fitted with clip-pulleys, or other classes of pulleys, driven by means of wire ropes actuated by steam engines a long distance away from the pumps; but the best plan to raise the water is undoubtedly the direct-acting water-pressure engine, driven by water taken from the pump-"trees," or rising-main in the shaft. Compressed air is good, as the exhaust assists the ventilation of the mine. Electricity is now gradually gaining ground, and gives very good results.

An arrangement of a water-pressure pumping engine fixed in the dip-working of a mine is shown in the diagram, Fig. 147. In this, A is the sump in the dip-working from which the water-pressure pump B draws the water; C is the main-sump to which the water has to be delivered from sump A; D is the main pump; E, the pump "trees" from which the water-pressure pump obtains its drive-water through the pipe F; G is the delivery-pipe from the pump B to the main sump C. The exhaust or waste water from the motor-cylinder is also forced into the delivery-pipe G, so as not to have to raise the exhaust-water by the pump B, and by that means increase the diameter.

In calculating the size of motor-cylinder, the working pressure must be taken only from the top of the ground-line H to the main sump, because the head due to the height from the dip-sump A to the main-sump C is counter-balanced by the exhaust-water from the motor-cylinder to the main-sump. The head due to the friction of the water in the pipes and bends must, of course, also be deducted.

The pipes should be large and as few bends as possible to reduce the friction to a minimum.

The principal feature to be noticed in rotative water-pressure engines is the prevention of shocks at the end of the stroke, which are so detrimental, and frequently cause a

great deal of damage and expense. The arrangement of relief-valves has already been illustrated in Figs. 105 and 106, and described on page 152.

Mr. Meyer's arrangement of air-vessels in direct com-

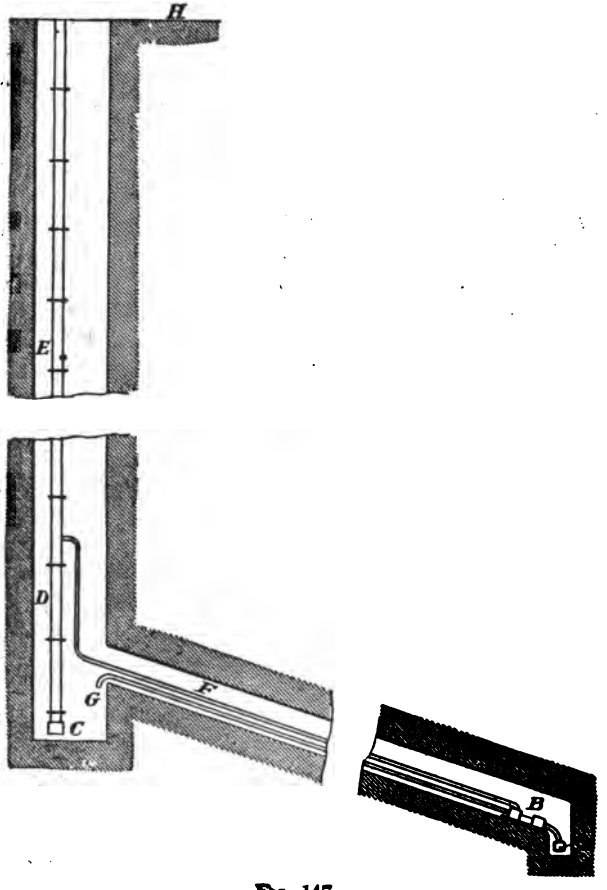

Fig. 147.

munication with the pressure-cylinder has also been noticed on page 155, and illustrated in Figs. 107 and 108.

All the working parts of the engine should be well balanced, so as to give an even and steady motion; hence, three and four-cylinder engines are the best, as they produce a uniform flow of the water both in and out of the cylinders, and the tendency for shocks is greatly reduced.

The duty of water-pressure engines is represented by the gallons of water consumed multiplied by 277·27 (number of cubic inches in one gallon), multiplied by the water-pressure in lbs. per square inch, the result divided by 12, the product being lbs. raised one foot high in one minute.

Example.—15 gallons of water used per minute, at a water-pressure of 75 lbs. per square inch, then

$$\frac{15 \times 277{\cdot}27 \times 75}{12} = 25{,}994 \text{ lbs.}$$

raised one foot high or foot-pounds.

The horse-power of a three-cylinder water-pressure engine is found by the following

Rule.—Multiply the area of the cylinder in square inches by the number of cylinders, the pressure of water in lbs. per square inch, the length of the stroke in inches and the number of revolutions per minute, the result to be divided by 33,000 multiplied by 12 or 39,600.

Example.—Three-cylinder engines, 3½ inches diameter of cylinders, 6 inches length of stroke, 75 lbs. water pressure per square inch, and 180 revolutions per minute:

3½ inches diameter equals 9·62 square inches area,

then we have

$$\frac{3 \times 9{\cdot}62 \times 6 \times 75 \times 180}{12 \times 33{,}000} = 5{\cdot}9 \text{ horse-power.}$$

CHAPTER XXII.

HYDRAULIC RAMS.

THE shocks that are so objectionable in water-pressure engines are made useful as a motive power, by which a portion of the water may be raised to a higher level by means of the hydraulic ram.

The hydraulic ram, although often illustrated in books on hydraulics, is less used than it ought to be. The reader generally regards it as a curious old-fashioned device, and thinks no more of it; but for simplicity, cheapness, and useful effect combined few machines are superior or even equal to it.

The merit of first employing the momentum of water to raise a portion of itself to a higher level is due to Mr. John Whitehurst, a watchmaker of Derby, who in the year 1772 erected one at Oulton, in Cheshire; but that apparatus, as will be seen, was not self-acting. The credit for the invention of the automatic hydraulic ram is due to M. Joseph Michel de Montgolfier, who does not appear to have known anything of Mr. Whitehurst's apparatus. This momentum was invented in the year 1796, and M. Montgolfier gave it the name it still bears, "Le Bélier Hydraulique," or "Hydraulic Ram," from the butting action of the water. The cock in Whitehurst's machine was replaced by an automatic valve, generally named the pulse-valve.

CLASSIFICATION.

There are three distinct types of hydraulic rams, viz.:—

First—Those having *no air-vessel* in direct communication with the drive-pipe.

Second.—Those *having an air-vessel* in direct communication with the drive-pipe.

Third.—Pumping rams.

Action of Hydraulic Rams.

The action of the hydraulic ram is easy to understand. Fig. 148 is a sectional elevation of one of the simplest form.

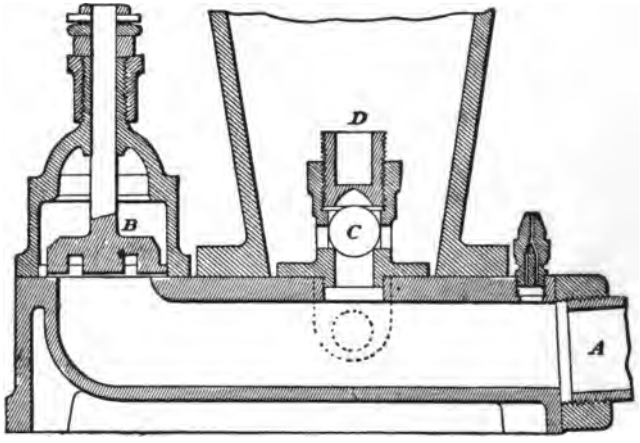

Fig. 148.

Supposing the water is at rest in the machine, and assuming, for example, that the pulse-valve B is open, and the delivery-valve C is closed :—

First.—The water that passes through the drive-pipe A begins to flow with a velocity due to the height of the fall through the pulse-valve B, which is open ; but the flow of the water and the pressure exerted by it while in motion upon the face of the valve causes the latter to close.

Second.—At the moment the issue of water ceases the *vis viva* possessed by the column of water in motion causes

the *ramming stroke*; that is, opens the delivery-valve C, the water enters the air-vessel D, and at the same time, in consequence of the effect of the shock upon the delivery-valve C, and in virtue of its elasticity, flows back through A.

Third.—At the moment the backward motion begins, the delivery-valve C closes and the pulse valve B opens, again allowing a passage to the water coming from the drive-pipe; then the three phases begin over again.

CHAPTER XXIII.

HYDRAULIC RAMS WITHOUT AIR-VESSEL IN COMMUNICATION WITH THE DRIVE-PIPE.

Whitehurst's Hydraulic Ram.

This ram is illustrated in Fig. 149. A is the reservoir from which the water passes into the drive-pipe B. The top of the reservoir A corresponds with the bottom of the reservoir C. D is a branch pipe fitted with an ordinary plug-cock E. F is a delivery-valve box fitted with a valve; G is the air-

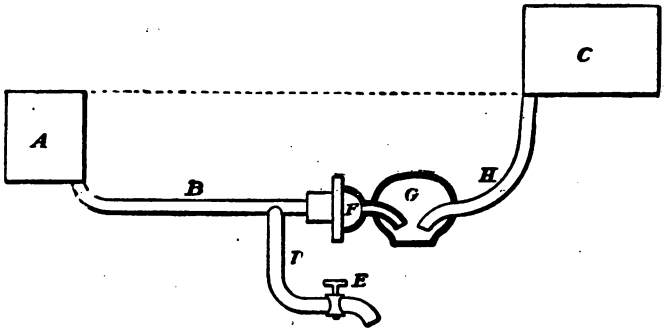

Fig. 149.

vessel into which enters the drive-pipe B and delivery-pipe H, both being turned towards the bottom of the air-vessel to prevent the air from being driven out when water is forced into it. When the cock E is opened the column of water in the drive-pipe B is set in motion, and, suddenly stopped by

the cock E, its momentous force will open the valve F. The air in the air-vessel is thus compressed and the water delivered through the pipe H into the top reservoir C.

The ram fixed at Oulton had a drive-pipe 1½ inch diameter, nearly 200 yards long. The delivery-pipe was also 1½ inches diameter, between 18 to 20 feet below the reservoir, and the cock E 16 feet below the drive-pipe.

Montgolfier's Hydraulic Ram.

This hydraulic ram is illustrated in Fig. 150. It consists of the drive-pipe A, pulse-valve B, delivery-valve C, air-vessel D, and rising-main E.

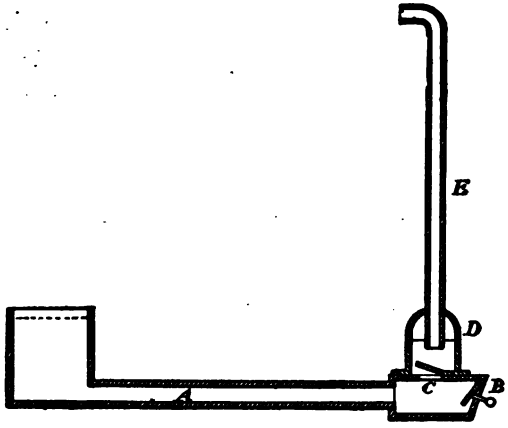

Fig 150.

Boulton and Watt's Hydraulic Ram.

This was in reality the first plan adopted by the elder Montgolfier; it was exceedingly simple and yet considered effective at that early stage. Fig. 151 is one arrangement. It consists of a horizontal drive-pipe A, with a trumpet-

shaped mouth to admit the water freely. This end was inserted into the side of a supply tank into which the stream of water flowed and kept it full; or it passed through a dam into a reservoir that could be maintained at a uniform height. At the end of the drive-pipe A was a weighted pulse-valve B, opening inwards; upon the top of the pipe, near the end, was an air-vessel C, the capacity of

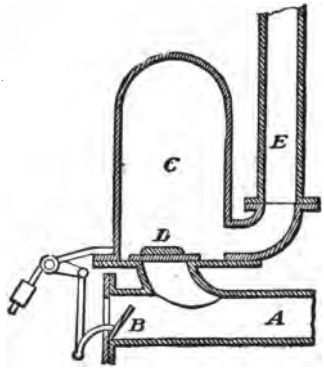

FIG. 151.

which was at least equal to ten times the quantity of water to be raised at each pulsation, and larger as the lift increased. At the bottom of the air-vessel was fitted a delivery-valve D, opening upwards, to admit the water into the air-vessel C, and preventing its return. To the air-vessel was bolted the delivery-pipe E carrying up the water, raised to a higher level by the action of the ram.

HETT'S HYDRAULIC RAM.

This hydraulic ram has been arrived at after considerable experience and a long course of experiments. Fig. 152 is a sectional elevation of this ram. A is the drive-pipe, B the

pulse-valve, C the air-vessel, D delivery-valve. This ram is arranged so as to give easy access to all the working parts without disconnecting any of the pipes. When the air-vessel is removed, which is done by unscrewing four nuts, the delivery-valve D can be removed. The size of the pulse-valve B is such that, while it is not unnecessarily

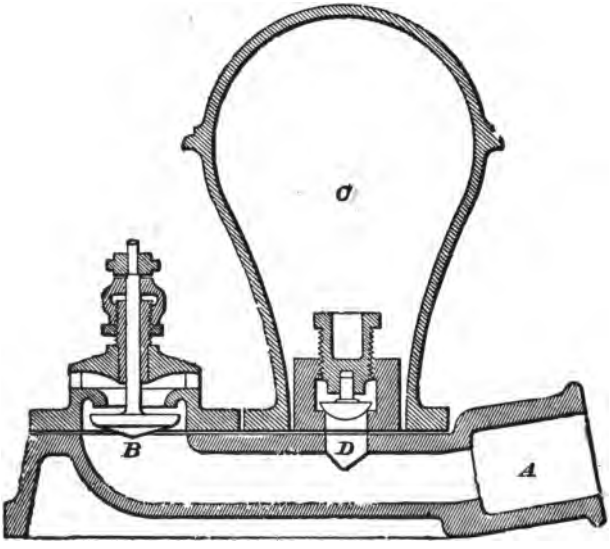

FIG. 152.

large, its area is sufficient to ensure delivery at a high elevation; it is adjustable by a suitable screw arrangement which will be illustrated and described under the head of "*Details of Hydraulic Rams.*" The delivery-valve is of the disc type, which gives a much larger area than a ball-valve of equal weight, and has been found by experience to give much better efficiency. Provision is also made for adjusting the lift of the delivery-valve, which is a point of great

importance in the working of hydraulic rams. The air-vessel is made very large to ensure a uniform motion of the water in the delivery-pipe. The ram is supplied with a "snifting-valve," or hole, drilled through a small gun-metal plug. The guides and adjustments of the pulse-valve itself are made of phosphor-bronze, and the delivery-valve of steel. The nuts holding down the air-vessel are of gun-metal, so as to prevent their setting fast and rendering access to the delivery-valve difficult. The studs are made of Low Moor iron, thus avoiding any chance of their twisting off. The various parts are made to templets, and the workmanship is equal to first-class engine work. The latter is of the greatest importance in hydraulic rams. Mr. Hett wisely remarks:

"While a steam engine will 'go' when very inaccurately made, a ram will not answer without very perfect fitting. A very slight inaccuracy in the workmanship, which would pass unnoticed in the valves of a pump, is sufficient to greatly impair or quite suspend the useful action of a ram."

Massey's Hydraulic Ram.

This ram is illustrated in sectional elevation Fig. 153, and plan, with the air-vessel and pulse-valve removed, Fig. 154. A is the drive-pipe, which finishes with a large easy bend G to give an easier flow for the water. The body is swelled round the pulse-valve B, as recommended by M. Arthur Morin. C is the air-vessel; D delivery-valve; E delivery-pipe; F plug in the air-vessel C, for admitting air when necessary. The delivery-valve D is made adjustable by means of a screw. The pulse-valve B is also provided with adjustment, which will be explained when we come to *valves used for Hydraulic Rams.*

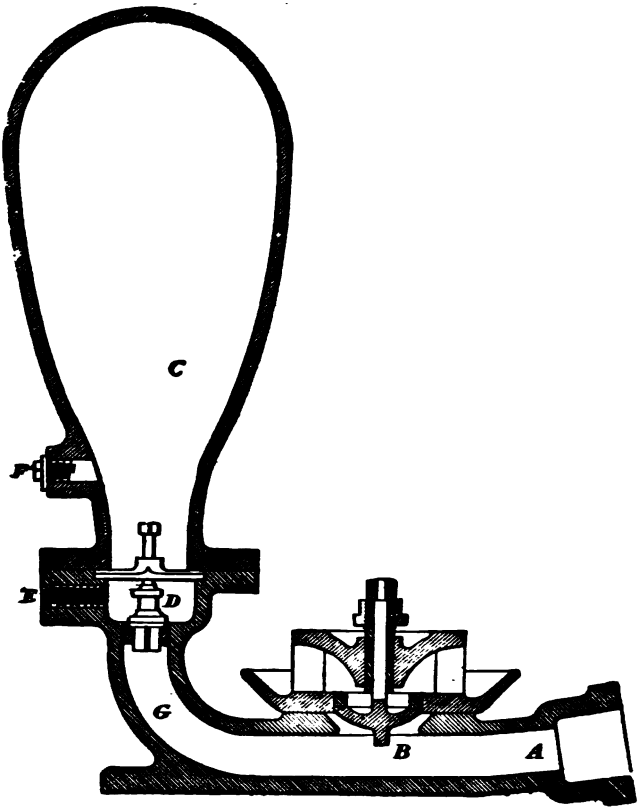

Fig. 153.

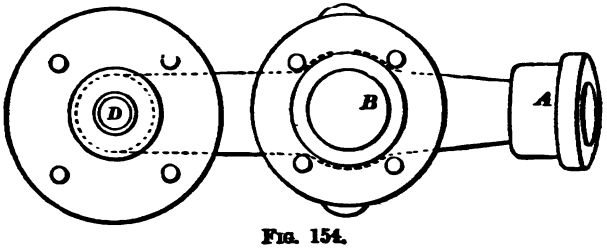

Fig. 154.

Morrow's Hydraulic Ram.

From the illustration Fig. 155 it will be seen that the arrangement of the pulse-valve and delivery-valve are different from all the hydraulic rams we have so far noticed. A is the drive-pipe and body of the ram, at the end of which

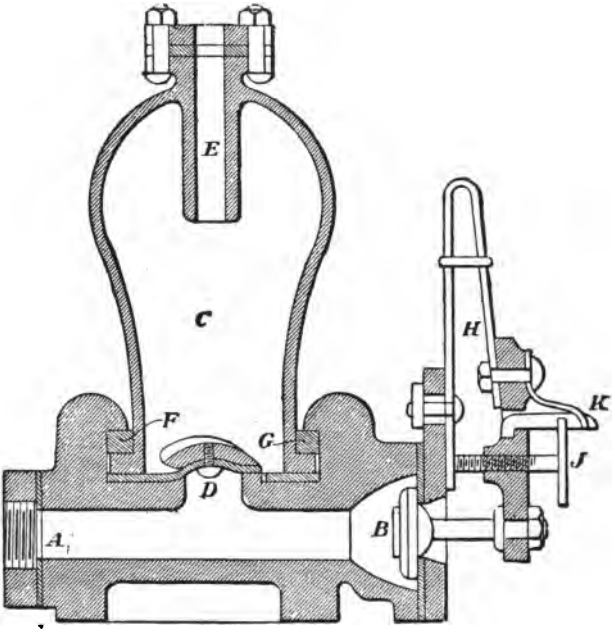

Fig. 155.

is placed the pulse-valve B, which latter works vertically; C is the air-vessel, furnished at the top with an internal dip-pipe E; D is the delivery-valve. The air-vessel C is secured to the ram body by two keys or wedges F and G. The delivery-valve D is of leather, which also forms the

joint between the ram body and the air-vessel C. The valve is made concave to receive the head of the rivet or bolt which secures it to the leather, and the leather touches the valve-seat a short distance from the edge of the valve-opening. The pulse-valve B is hung upon a casting attached to the lower end of the spring H, and its stroke is regulated by the screw J, which bears against the body of the ram. The head of the screw J is provided with teeth, or notches, which are secured in any required position by a stop, or pawl, K. This arrangement admits of the opening of the valve being regulated to the greatest nicety.

Fischer's Hydraulic Ram.

This hydraulic ram is of a very peculiar construction; the drive-pipe was intended to be 40 inches diameter. It was never made, but a model, with a 1¼ inch diameter drive-pipe, was made in order to test its working. As it probably will be interesting to the reader to see the construction, we will now give a description and copy of the illustrations given in *The Iron Age*, in the year 1880.

Fig. 156 is an elevation and part section showing the air-pipes; Fig. 157 a sectional elevation; Fig. 158 an enlarged perspective view showing the pulse-valve B and delivery-valve D in elevation; and Fig. 159 a section of the valve-box for the air-valves.

A is the drive-pipe; B the pulse-valve, which is annular-shaped and guided by the delivery-valve D, and eight guides underneath the valve, there being eight stops against which the pulse-valve B rests when it is open; C is the air-vessel.

The first point that is noticeable in this design is the very large area of the pulse-valve B. It will also be seen that there is no water at rest in the ram to form an anvil, as

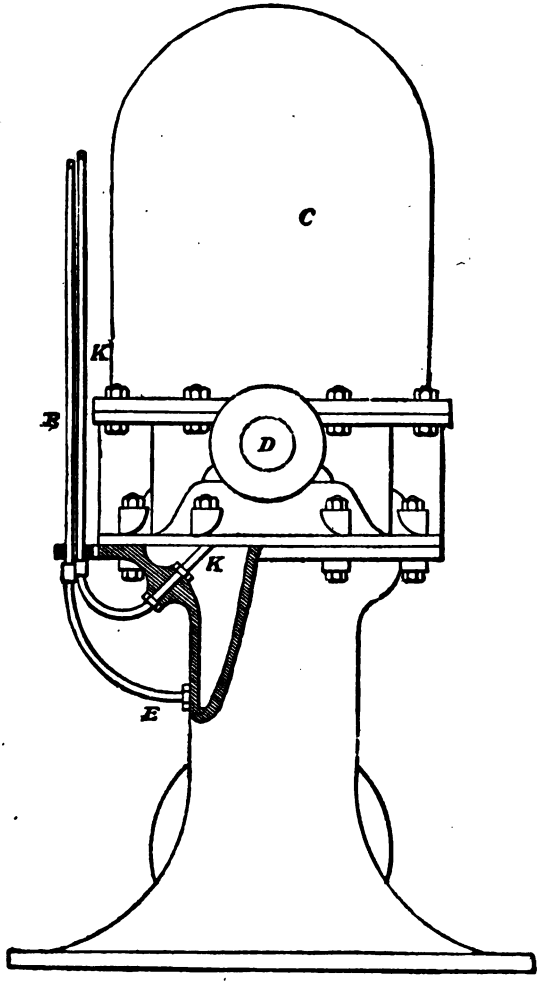

FIG. 156.

it were, when the pulse-valve B closes, if we except the small amount in the neck of the delivery valve D. Even this is diminished by the very neat air-valve and cushion arrangement.

From the drive-pipe A a small pipe E E is carried

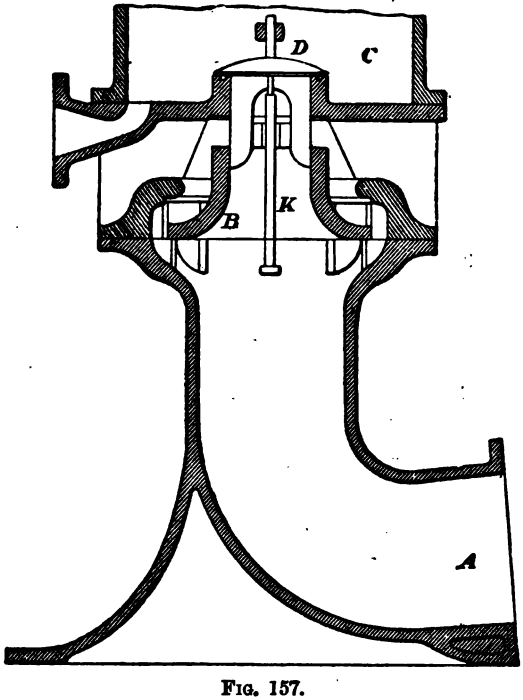

FIG. 157.

upwards to a point above the air-vessel, where it is brought into the lower part of the air or valve chamber F, Fig. 159. This valve-chest has three chambers, the middle and the upper portions of it communicate with each other by means of the valves G and H. Upon the opening of the

valve J the lower chamber opens at once to the atmosphere. From the upper part of the chest the small pipe K is carried down, as shown in Figs. 156 and 157, and entering the pipe passes up through the centre of the pulse-valve B, so as to discharge the air just beneath the hollow of the delivery-valve D, forming an air-cushion.

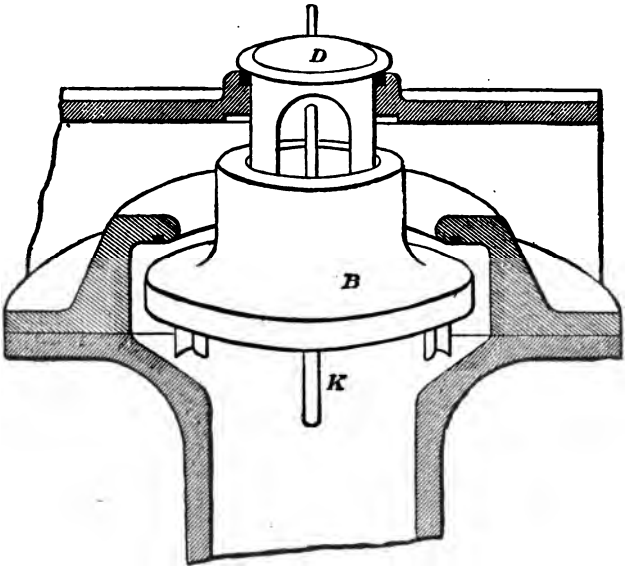

FIG. 158.

Whenever the pulse-valve B closes the shock forces the water through the pipe E, and compresses the air in the lower chamber of the valve-chest F; as it compresses the air it drives a portion of it through the valve G into the middle chamber. After the cessation of the shock a portion of this air escapes into the upper part of the chest, and passes out through the air-pipe K under the delivery-

valve D. Here it acts first as a cushion, and then passes on to supply the air-vessel C with air. The reaction, as the valves open and close, is sufficient to keep a constant supply of water in the lower air-chamber. When the water passes through the valves, then, it meets only air and cushion, hence the shocks are very light.

Had provision been made for adjusting the weight and amount of lift of the pulse-valve B, this would seem to be

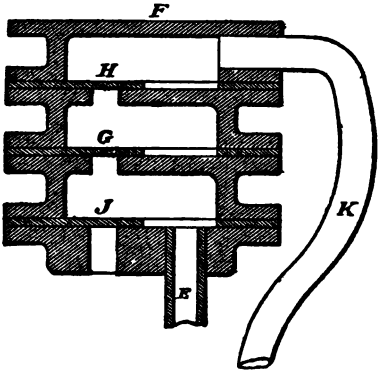

FIG. 159.

one of the most perfect of the large rams yet devised. It will be observed that both valves can be got at without disconnecting the pipes, simply by taking off the air-vessel C.

Mr. Hett differs from the opinion given by the writer of the article in *The Iron Age*, for Mr. Hett says, "The design is not a practical one."

HANSON'S HYDRAULIC RAM.

This hydraulic ram is illustrated in sectional elevation Fig. 160. A is the drive-pipe; B the ordinary pulse-valve; C the air-vessel; D the delivery-valve; E the delivery-pipe;

F is an additional pulse-valve or head-valve, which is supposed to prevent the recoil of the water in the drive-pipe A, and facilitate the working of the ram. It is difficult

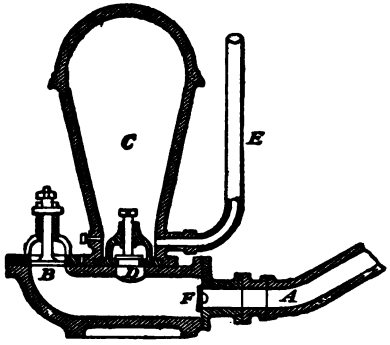

FIG. 160.

to see any advantage gained; it is, however, more possible that it is a hindrance to the free flow of the water into the body of the ram.

KEITH'S HYDRAULIC RAM.

A hydraulic ram specially designed for low falls, and which has given remarkably good results, is illustrated in sectional elevation, Fig. 161; and enlarged section of the ball-and-socket joint R, Fig. 162. Hydraulic rams, as ordinarily constructed, are only adapted for working in situations where a moderate or considerable head of water is available, a comparatively high pressure of water being required to overcome the weight of the pulse-valve, and to give sufficient escape of water to cause a reaction resulting from the sudden checking of its flow. The object aimed at by Mr. Keith in this design of hydraulic ram is to deliver a large quantity of water with a low fall; and to obtain this

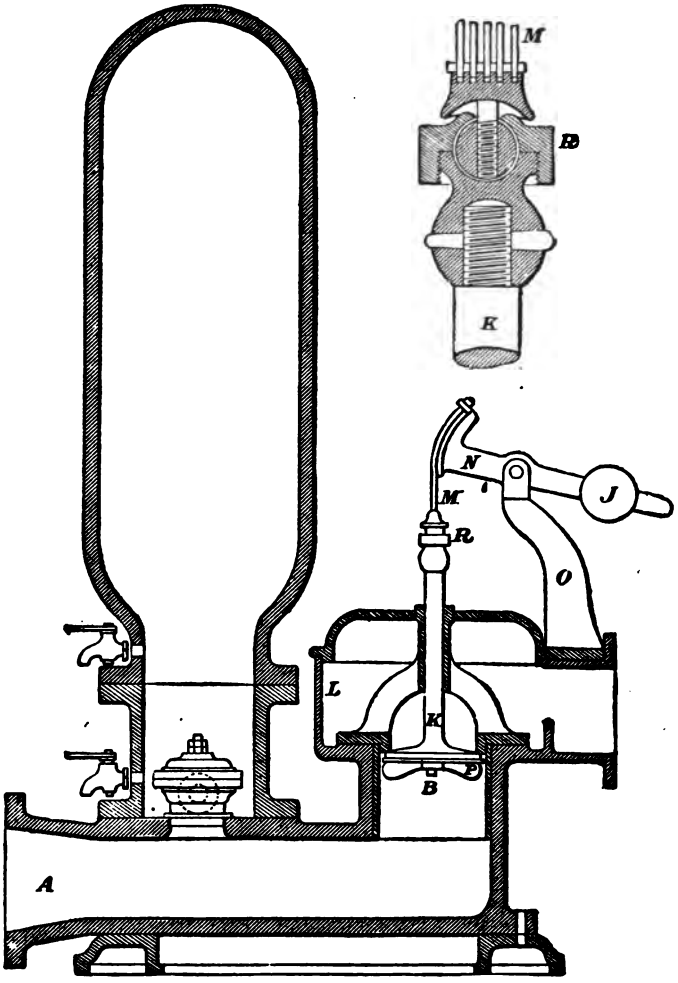

FIGS. 161 and 162.

result the pulse-valve B is counterbalanced by a weight J, to overcome the weight of the valve, and allow even the very largest and heaviest pulse-valve to be made, in effect, so light that a very low head of fall of water is able to raise the valve smartly, and give the large escape of water necessary to produce the required recoil, whereby the highest effective duty of the ram may be secured. The ram may be of the ordinary construction as regards the balancing arrangement.

A is the drive-pipe; B the pulse-valve, the spindle K passing through the casing L; the spindle is connected by a link-chain M to the lever N, centred on a bracket O, fitted to the top of the casing L; the lever is furnished with a balance-weight J. The pulse-valve is provided with inclined webs P, imparting to it an intermittent rotating motion; and to permit of the rotation of the spindle, without interfering with the action of the balance-weight arrangement, a ball-and-socket joint R, shown enlarged in Fig. 162, is used to connect the upper end of the valve-spindle K with the link-chain M, attached to the balance lever N. One of these rams raised water to a height of 100 feet with a fall of 3 feet 6 inches; another ram raised 20,000 to 25,000 gallons of water per day to a height of 300 feet.

Durozoi's Hydraulic Ram.

This ram resembles the ordinary hydraulic ram except that the pulse-valve is covered and the overflow water passes through a pipe; there is also a complicated arrangement for supplying the air-vessel with air.

This hydraulic ram is illustrated in sectional elevation Fig. 163. A is the drive-pipe; B, pulse-valve; C, air-vessel; D, delivery-valve; E, delivery-pipe; F is a casing covering the pulse-valve B, and G the outlet pipe for the overflow or waste-water.

The main feature in this hydraulic ram, however, consists in the arrangement for supplying the air-vessel C with air. The air-supply orifice H communicates with the air-vessel C by the pipe J, with the drive-pipe A by the

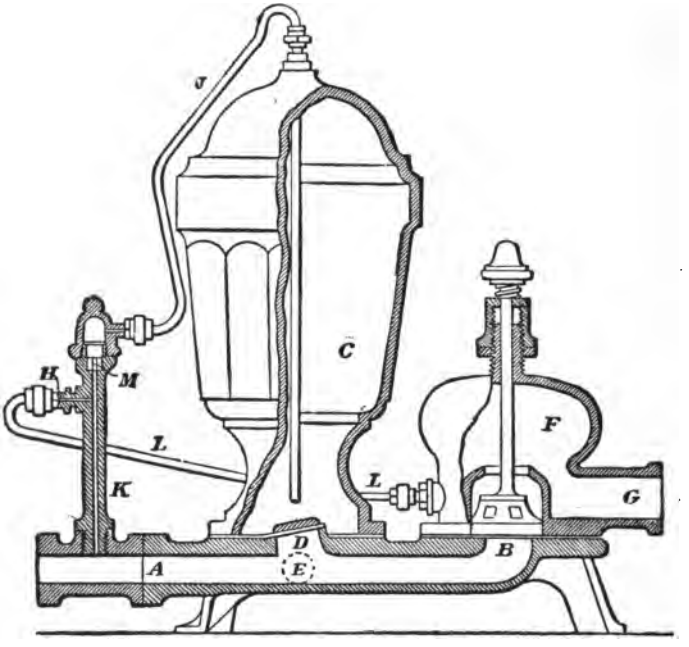

FIG. 163.

hollow pillar K, and a pipe L with a cover or casing F. While the water runs through the drive-pipe A, and the pulse-valve B, the level of the water in the hollow pillar K sinks, and air penetrates into it; when the pulse-valve B shuts and the pressure of the water in the body of the ram increases, the water in the hollow pillar K rises above the air

inlet orifice, and encloses a certain quantity of air in the space below the check-valve M, at the top of the pillar K, lifts the valve, and forces the air into the air-vessel C. As the pressure of the water in the pillar K equals that under the delivery-valve D, or in the air-vessel C, the latter is thus regularly supplied whatever the height of the lift may be. The water which flows out of the pillar K, during the compression of the air through the branch at H, is passed out by the inclined pipe L to the casing F.

M. Durozoi has also constructed a double-acting hydraulic ram for low falls. In that case he balances the pulse-valve B, so that it will close without the water attaining an excessive speed, as this will produce too severe shocks. This is done by means of levers and weights. In the double-acting hydraulic ram the drive-pipe from the reservoir is forked, and leads to two drive-pipes A, side by side, with two separate pulse-valves B, and casings F, but one air-vessel with two delivery-valves.

Supposing one of the pulse-valves B to be opened, the water will flow into the former branch, and, shutting the valve, penetrate into the air-vessel, the check-valve at the top of the supply pipe closing, at the same time, the reaction of the pressure into the water in the other branch, and the action thus goes on alternately between the two. A portion of the energy otherwise uselessly expended in back pressure in the supply-pipes is thus utilised.

Bolée's Hydraulic Ram.

The peculiarities of this hydraulic ram consist in that the delivery-valve D is of the metal clack type, and a very complicated arrangement of charging the air-vessel C with air.

It is illustrated in Fig. 164, which is an elevation, Fig. 165 a sectional elevation; Fig. 166 a plan; Fig. 167 an

enlarged cross-section through the pulse-valve B; Fig. 168 an enlarged section of the air-valve on the top of the pillar H; and Fig. 169 an enlarged section of the valve M on the body of the ram.

A is the drive-pipe; B, the pulse-valve; C, the air-vessel;

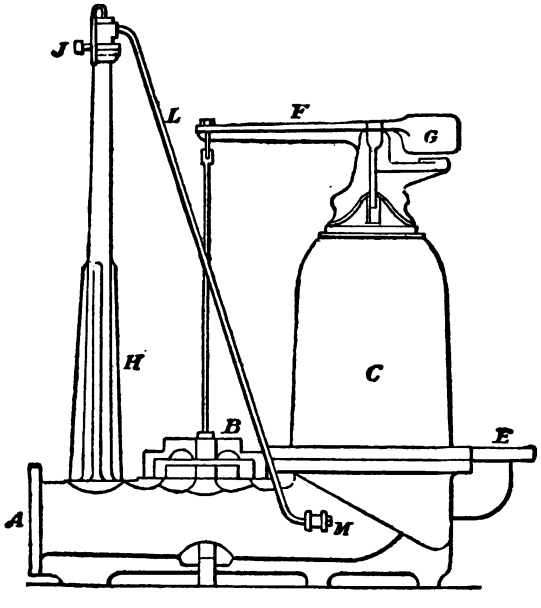

FIG. 164.

D, the delivery-valve; E, delivery-pipe. The pulse-valve B is partly balanced by the balance-lever F and weight G. The effect of this is to make the pulse-valve B close more readily. The lower rod of this valve is guided in a little cylinder with two lateral openings, the bottom of which is furnished with india-rubber washers O, to make the valve

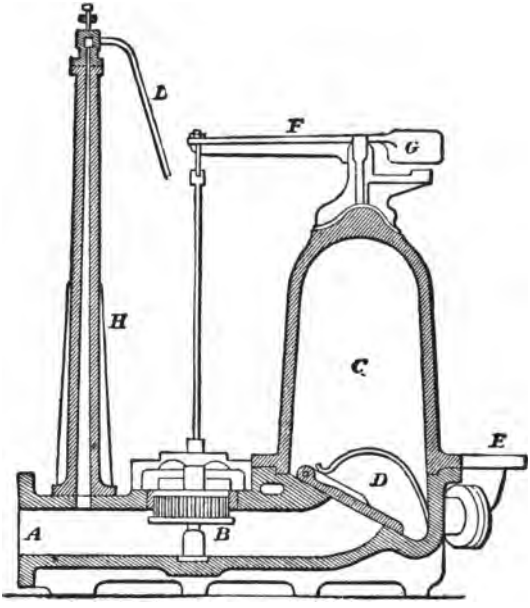

FIG. 165.

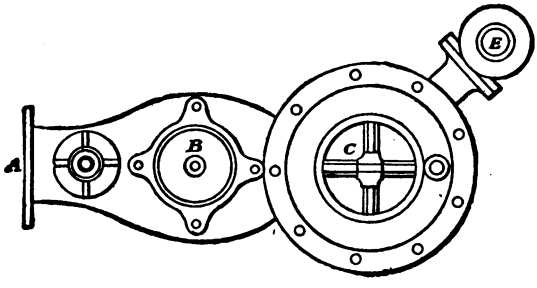

FIG. 166.

fall easily and noiselessly against its lower stop, and also washers N to prevent it banging when rising. Instead of the common snifting-valve placed upon the body of the ram, M. Bolée has placed in the front of the pulse-valve B a hollow column H, the top of which is high enough to be out of the reach of the highest floods. The top of this column is shown enlarged in Fig. 168. A snifting-valve is provided and furnished with a pointed adjustment-screw J,

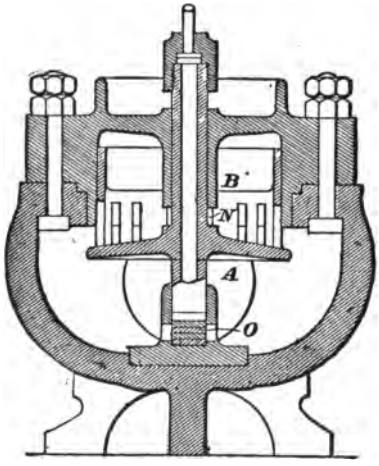

FIG. 167.

and a back-pressure valve K. A pipe L forms a communication between the top of this valve-box and the body of the ram; the pipe opens into the body of the ram below the pulse-valve B, and its orifice is furnished with a second valve M, which latter is shown enlarged in Fig. 169. At the moment when the stroke occurs below the delivery-valve D, the water ascends violently the pipe L and compresses the air contained in it; a portion of this air escapes

through the snifting-valve J, but the remaining portion lifts the valve K, and occupies a position above it. When the pulse-valve B descends, the water descends in the pipe L, and the external air enters through the snifting-valve J. The valve M prevents the compressed air surrounding it from returning into the pipe L by closing the orifice of the pipe under the action of the stroke. The compressed air contained in the chamber of this valve is then forced to enter

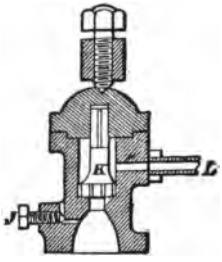

FIG. 168.

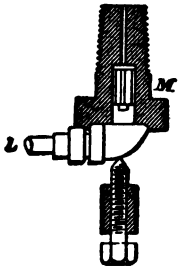

FIG. 169.

under the delivery-valve D, at the moment when the latter is opened, and this air rises up into the air-vessel C. Thus the supply of air to the air-vessel C is effected at each stroke.

HYDRAULIC INJECTION RAM.

A hydraulic ram of this description is illustrated in sectional elevation, Fig. 170. Sometimes it is required to raise water from a well on a lower level than the source that is required to work the ram. A is the drive-pipe; B the pulse-valve, which acts the reverse way to that of the ordinary hydraulic rams, the body of water being in front of the valve, consequently, instead of giving a thrust upon the

larger part of the drive-pipe, it tends to create a partial vacuum; F is the overflow-pipe; H the suction-pipe from the well; D the suction-valve; C the air-vessel; G the delivery-pipe; E the delivery-valve. Now, if the weight of the water from the delivery-valve E to the bottom of the pipe F is 6 lbs., the water will obtain a velocity of 24 lbs.;

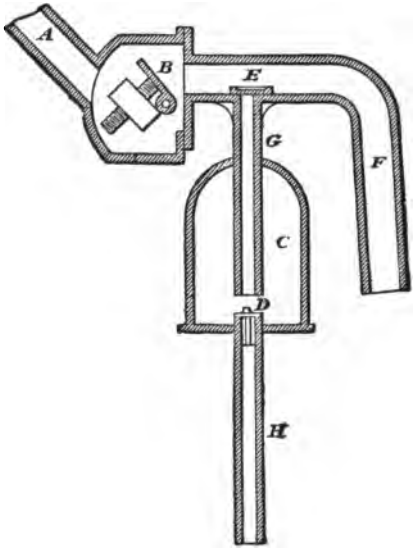

FIG. 170.

therefore we get 6 multiplied by 24, which equals 144 lbs., and the momentum will be 61·92 lbs. per square inch. If the well is 28 feet deep, and the water is required to be drawn up, the vacuum pressure required will be 14 lbs. per square inch. Therefore 61·92 minus 14 equals 47·92 lbs. above the required power, which will make up for slip, bad joints, &c.

Blake's Hydraulic Ram.

Now we come to an ordinary hydraulic ram with a spring air-vessel; it is illustrated in Fig. 171, which is a sectional elevation.

A is a drive-pipe; B the pulse-valve: D delivery-valve;

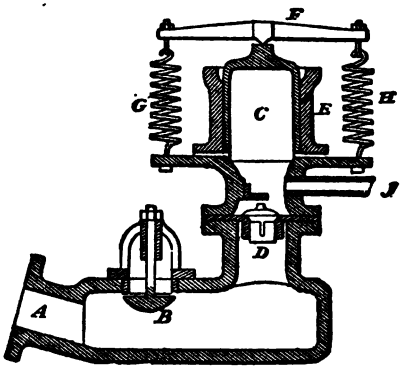

Fig. 171.

C is a cylinder or piston working or sliding up and down in a cylinder E. The piston C is held down by a cross-bar F and two springs G and H, which springs are made adjustable to the required pressure by screws and nuts. J is the delivery-pipe.

It will be clearly seen that when the ram is working the water will rise through the delivery-valve D at every pulsation of the pulse-valve B; the momentum of the water will be felt upon the end of the cylinder C, and will cause the piston to rise and fall at each stroke or pulsation of the ram, according to the pressure upon its face. A difficulty has been found in keeping the piston C water and air-tight in the cylinder E.

Davies's Accumulator for Hydraulic Rams.

Instead of the springs adopted by Mr. Blake, Mr. Davies has used an accumulator, as shown in Fig. 172. In this there is a cylinder E, in which works the plunger C, made water-tight and air-tight by an ordinary hat-leather D secured by means of a gland F, bolted to the cylinder E. On the top of the hollow plunger C is a chamber G. It will be seen that this air-vessel and self-loading accumulator have the useful effect of an ordinary air-vessel combined with the springs of the previously described arrangement, and the piston is loaded with water in exact proportion to the pressure of the water within the rising-main.

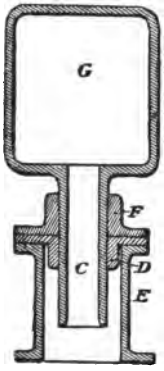

Fig. 172.

The action is as follows:—When the water passes through the delivery-valve up the hollow plunger C and into the air-vessel or chamber G, then, as it rises into the delivery-pipe, so it will also rise into the accumulator, and the weight of water tends to load the accumulator.

Davies's Self-Starting and Stopping Hydraulic Ram.

Mr. Hett, in his very useful little book, 'Rural Water Supply,' says: "Among the useful adjuncts to the ram foremost runs the intermittent gear. The old-fashioned plan of bucket and lever is largely used, although its origin is lost sight of. The water in the reservoir rises and overflows through the pipe into the bucket. As soon as the bucket is

sufficiently filled it lifts a balance weight and overcomes pressure on the foot-valve; it suddenly falls, as far as the guards will permit, opening the valve, and thus starting the ram. The water escapes through a small hole in the bottom of the bucket, and the counter-weight lifts it, and allows the valve to close as suddenly as it opened. The water again commences rising in the cistern, and when it reaches the water-pipe the action is repeated. The size of the hole in the bottom of the bucket may be enlarged to regulate the

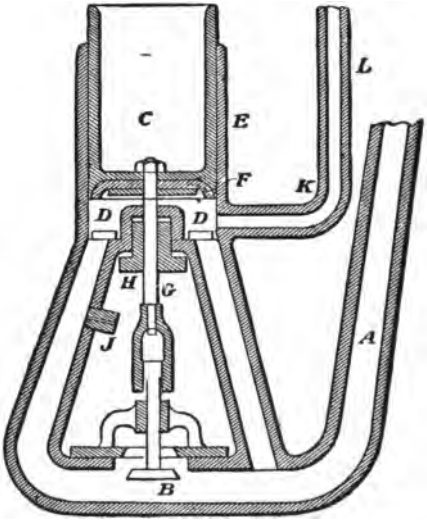

FIG. 173.

frequency of the stoppages of the ram. Experience proves that a ram will work best with frequent rather than with long intervals of rest."

Mr. Davies's ram is illustrated in Fig. 173. It consists of the body of the ram or drive-pipe A; B, the pulse-valve; D and D are two delivery-valves; C is an accumulator-piston;

E a cylinder in which the accumulator-piston C is working, and kept tight by means of an ordinary cup-leather F. L is the rising-main or delivery-pipe. The pulse-valve B and the accumulator-piston C are connected by means of the spindle G, working through a gland and stuffing-box H. J is a snifting-valve.

The action of this arrangement is as follows:—The water enters from the drive-pipe A to the balance at the rising-main at the point K, and causes it to rise or fall according to the pressure of the column of water, thus acting on the valve, which stops the machine, thus saving the pipes from bursting and the machine from heavy strains. The pulse-valve B, it will be seen, cannot work when the accumulator-piston C is under an extra pressure, caused by the closing of the stop-valve, cock or ball-valve on the rising main.

Grier's Sentinel for Hydraulic Rams.

Mr. Grier, in his book on 'Rural Hydraulics' describes his self-starting-gear, which he terms "Sentinel," in the following manner:—"In fact the ram is very capricious and often puzzles the most expert."

"Sentinel."

Here it is that the "Sentinel" proves its great value, for as soon as the impetus valve (*pulse-valve*) has closed from any cause, the sentinel stands prepared to strike a blow, and will continue striking till the valve operates. The sentinels are essentially of the same construction, each having a hub and two spokes, as will be seen in Fig. 174. On the end of one spoke is an adjustable weight, on the other a can having an adjustable opening. The hub is supported by a stand screwed to the plank on which the ram rests. The lower sentinel is kept out of use as long as the ram is working by

the splash from the impetus-valve, but as soon as that valve stops down the water ceases to fall into the can, and gently ripples out of one over the valve-seat. As the water in the can escapes it becomes lighter, rises, and carries the impetus-valve up, closing it. As no water can now escape the spring

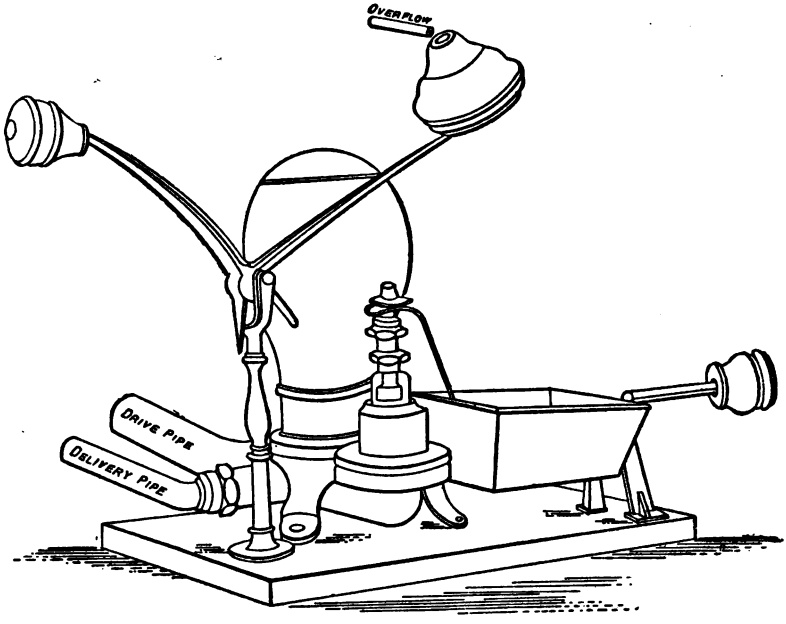

FIG. 174.

basin fills, and, overflowing, the stream falls into can of upper sentinel, part of which passes through it to the lower can, removing it out of the way of the valve. The can of the upper sentinel filling at the same time, it descends, and striking the top of the valve-stem, puts it in motion. As the can descends it moves from under the overflow stream. It

soon becomes empty and lighter, and rises to its former position, and if the impetus valve does not operate, it descends again and again till it does operate. This sentinel differs from all other devices for keeping the ram in motion, in that it keeps striking until the valve does operate; all other devices have but a single movement, and if the valve does not open with that they are of no further service until operated by man. The standards and arms of sentinel are made of malleable iron. The cans and bolts are of brass, and will last for years.

CHAPTER XXIV.

HYDRAULIC RAMS WITH AIR-VESSEL IN DIRECT COMMUNICATION WITH THE DRIVE-PIPE.

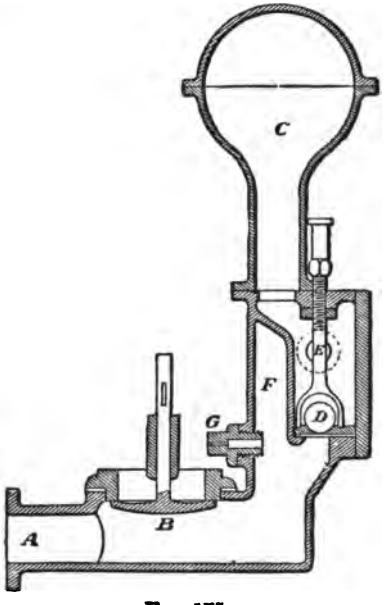

FIG. 175.

EASTON AND AMOS' HYDRAULIC RAM.

WE will now examine a hydraulic ram with an air-vessel in direct communication with the drive-pipe. This hydraulic ram is illustrated in sectional elevation, Fig. 175.

soon becomes empty and lighter, and rises to its former position, and if the impetus valve does not operate, it descends again and again till it does operate. This sentinel differs from all other devices for keeping the ram in motion, in that it keeps striking until the valve does operate; all other devices have but a single movement, and if the valve does not open with that they are of no further service until operated by man. The standards and arms of sentinel are made of malleable iron. The cans and bolts are of brass, and will last for years.

CHAPTER XXIV.

HYDRAULIC RAMS WITH AIR-VESSEL IN DIRECT COMMUNICATION WITH THE DRIVE-PIPE.

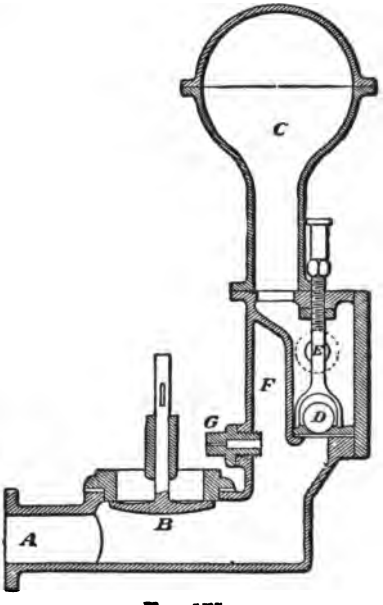

FIG. 175.

EASTON AND AMOS' HYDRAULIC RAM.

WE will now examine a hydraulic ram with an air-vessel in direct communication with the drive-pipe. This hydraulic ram is illustrated in sectional elevation, Fig. 175.

A is the drive-pipe; B, the pulse-valve; C, the ordinary air-vessel; D, delivery-valve; E, delivery-pipe; F, air-vessel in direct communication with the drive-pipe.

Supposing the water to be running down the drive-pipe A, and the pulse-valve B makes a beat against its seat, the water will then urge itself forward through the body of the ram, strike against the delivery-valve D, and flow up into the air-vessel C and the delivery-pipe E; at the same instant the momentum of the water causes a partial vacuum to take place at F, and to draw in air through the snifting-valve G. The air in the secondary air-vessel F is not great, therefore the delivery-valve D is not jerked open with so much violence as when no air-vessel F is used. On the recoil of the column of water in the drive-pipe A a partial vacuum is formed, and a small quantity of air enters through the snifting-valve G into the water. This air it might be supposed would return, but it cannot, and for this reason: that part of the water falls back and instantly fills up the small hole in the snifting-valve, and the air, being lighter than the water, ascends to the top, and at each beat this small quantity of fresh air enters through the delivery-valve D and finds its way into the delivery air-vessel C.

Blake's Air-Chamber and Spring Piston Hydraulic Ram.

Mr. Blake in this hydraulic ram uses a spring piston instead of the secondary air-vessel adopted by Messrs. Easton and Amos. A hydraulic ram of this description is illustrated in Fig. 176, which is a sectional elevation.

A is the drive-pipe; B, the pulse-valve; C, an ordinary air-vessel; D, the delivery-valve; E, delivery-pipe or rising-main. F is a spring-piston, working in a small cylinder G; inside the piston is fixed a spring H, acting against the bottom of the piston F and a cross-bar J, and adjusted to its proper tension by means of a set-screw K.

When the water flows into the body of the ram A, and through the pulse-valve B, having acquired a sufficient velocity, it closes the pulse-valve B. Its momentum forces it up the delivery-valve D at the same time the water forces

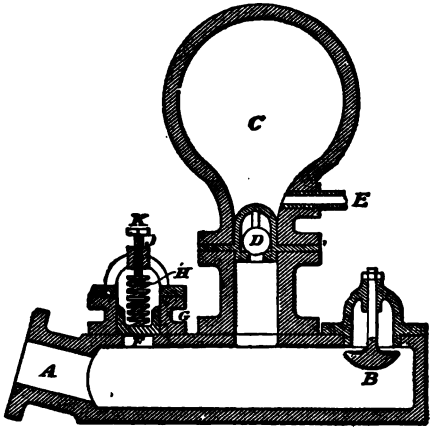

FIG. 176.

the piston F up into the cylinder G. When the recoil or ramming action caused by the sudden closing of the pulse-valve B takes place, the spring forces back the piston, thus assisting the recoil and making it more certain, and the ram less liable to stop.

CHAPTER XXV.

HYDRAULIC PUMPING-RAMS.

PUMPING RAMS are those hydraulic rams which are actuated by dirty water and raise clear water or any other liquid, fluid or semi-fluid.

HETT'S HYDRAULIC PUMPING-RAM.

This ram is illustrated in sectional elevation Fig. 177, in which A is the drive-pipe; B, the pulse-valve; C, air-vessel; D, delivery-valve; so far it exactly resembles Mr. Hett's ordinary ram. E is the pumping diaphragm; F the suction-pipe; G the suction-valve; H the delivery-valve; and J the air-vessel.

The action of this ram is as follows:—It is similar to the simple hydraulic ram, but as soon as the shock occurs the diaphragm E is pushed upwards, reducing the space above the diaphragm and forcing the water through the delivery valve H into the air-vessel J. When the water in the drive-pipe A comes to rest, the diaphragm E returns to the position shown in the illustration, enlarges the space above the diaphragm, and water enters through the suction-valve G; this is repeated at every pulsation of the pulse-valve B.

Several arrangements of this type of hydraulic rams have been invented and designed at different times, but the author knows of no better arrangement, because every part of the apparatus is accessible without disturbing any of the pipes.

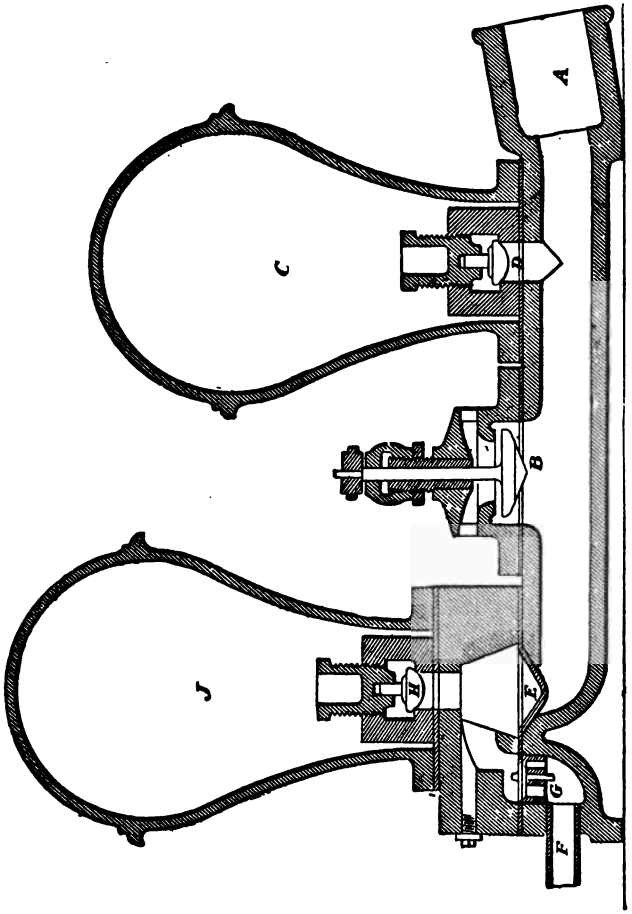

FIG. 177.

Fyfe's Hydraulic Pumping-Ram.

Mr. Fyfe employs a similar diaphragm arranged in the same manner as Mr. Hett, only when the diaphragm E, in Fig. 178, has to be examined or replaced when worn out the

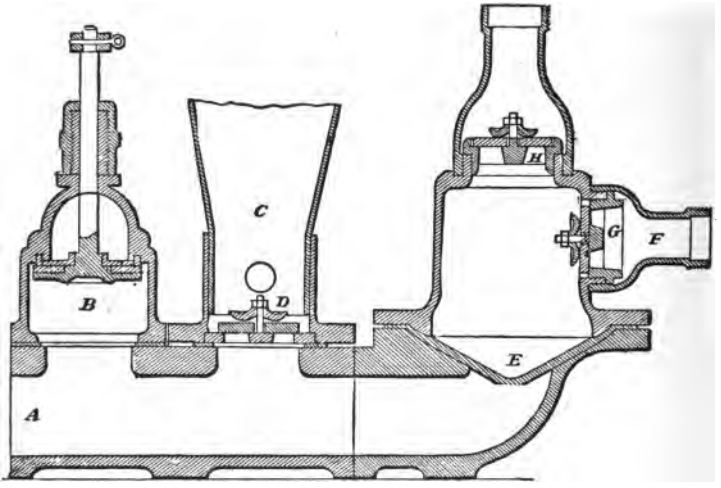

Fig. 178.

suction and delivery-pipes, for the pumping part of the apparatus, must be removed before access can be had to the diaphragm. When the suction is deep and suction-pipe long a weight must be placed on the top of the diaphragm to ensure its return to its proper position.

Hydraulic Pumping-Ram with Weighted Diaphragm.

Fig. 179 shows a sectional elevation of the pumping part of a hydraulic ram with a weighted diaphragm. E is the dia-

phragm, on the top of which is placed a lead weight K; F is the suction-pipe; G, suction-valve; H, the delivery-

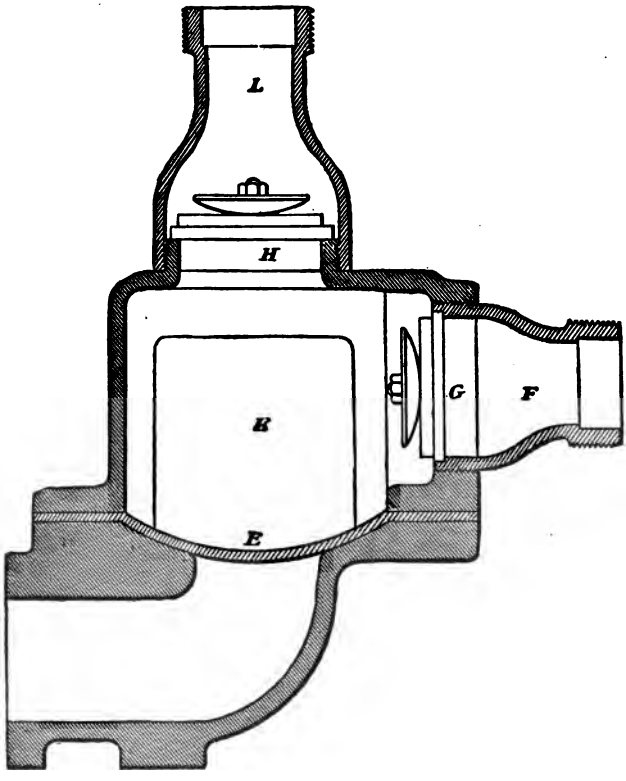

FIG. 179.

valve, and L, the delivery-branch. The air-vessel is fitted with a delivery dip-pipe and a back pressure-valve.

Keith's Hydraulic Pumping-Ram.

Another hydraulic pumping-ram is illustrated in Fig. 180, which is an elevation; and Fig. 181, a cross-

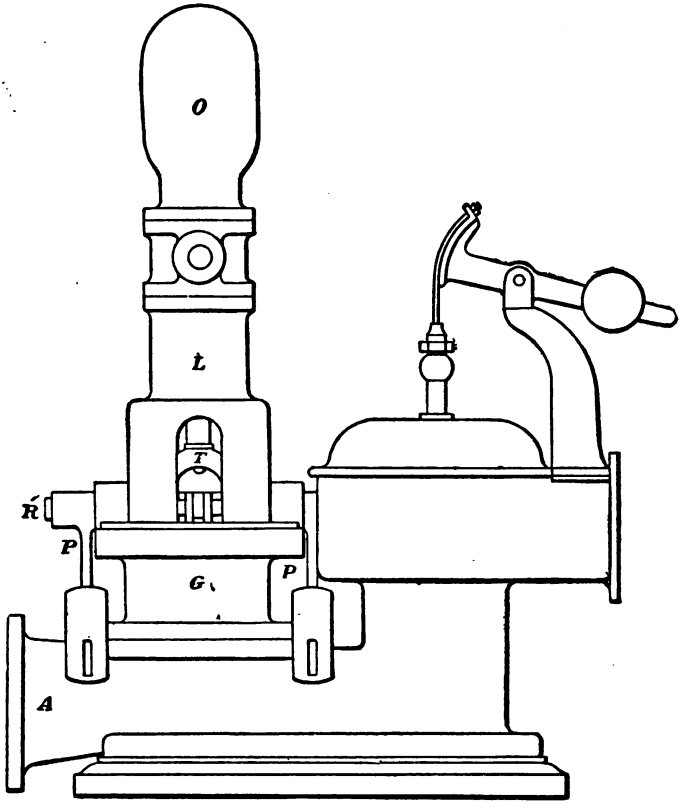

Fig. 180.

section through the pumping part. In this case it will be seen that, instead of the diaphragm, two pistons are em-

ployed. Instead of the air-vessel C, in Mr. Keith's ordinary hydraulic ram, illustrated in Fig. 161, and described on page 213, a cylinder G is provided with a piston H, which

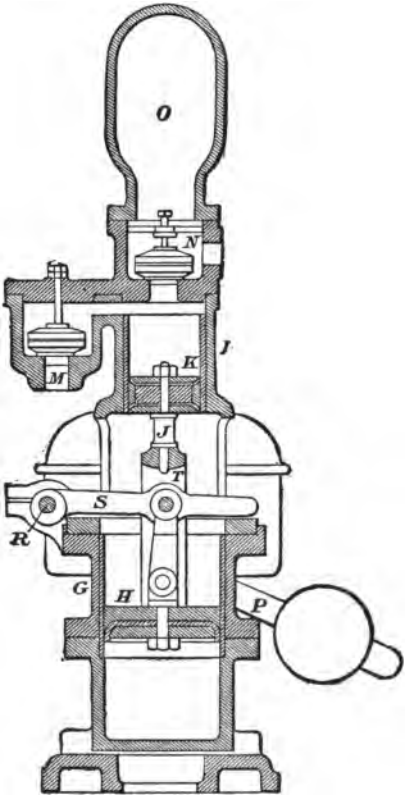

FIG. 181.

is connected by a rod J to a piston K, working in a smaller cylinder or pump-barrel L, such pump-barrel being provided

with a suction-valve M, and delivery-valve N, and air-vessel O. This pump is single-acting, and to ensure the return of the piston, in cases where the ram is used for pumping water from a well or spring, the weight of the water in the suction-pipe is balanced by a lever arrangement consisting of a weighted single or double lever P, on a rocking-shaft R, on which is fixed a lever S, attached by a link T to the piston H, or the fork end of the rod J, through which the lever S passes and extends across the working pistons. The other parts of the ram are similar to the ram shown in Fig. 161.

Blake's Hydraulic Pumping-Ram.

This pumping-ram differs from Mr. Keith's ram, inasmuch that he employs, as will be seen from the sectional elevation Fig. 182, a spring instead of the weighted levers. A is the drive-pipe; B, pulse-valve; C, a piston instead of the usual delivery-valve in ordinary hydraulic pumping-rams; D is the pump-piston; E, the rod coupling the two pistons; F is the suction-pipe; G, suction-valve; H, the delivery-valve; J, delivery-pipe; K, the air-vessel for the pumping part. Instead of the lead weight K in Fig. 179, or the weighted levers P in Fig. 180, an adjustable spring L is employed in this case. The two pistons C and D are packed with ordinary cup-leathers as used in pumps.

Durozoi's Hydraulic Pumping-Ram.

Another modification of a hydraulic pumping-ram is illustrated in Fig. 183. A is the drive-pipe; B, the pulse-valve; C, the guide-cylinder for the piston D; E, the over-flow pipe from the pulse-valve B, which is provided in the cover F. The stem G, on the piston D, forms the plunger

for the clean water pump. H is the suction-pipe; J, delivery-pipe. When the column of water has acquired the maximum velocity due to the height of fall, the pulse-valve B is lifted suddenly against the top of the chamber K, and closes the outlet orifice E, the shock being moderated by

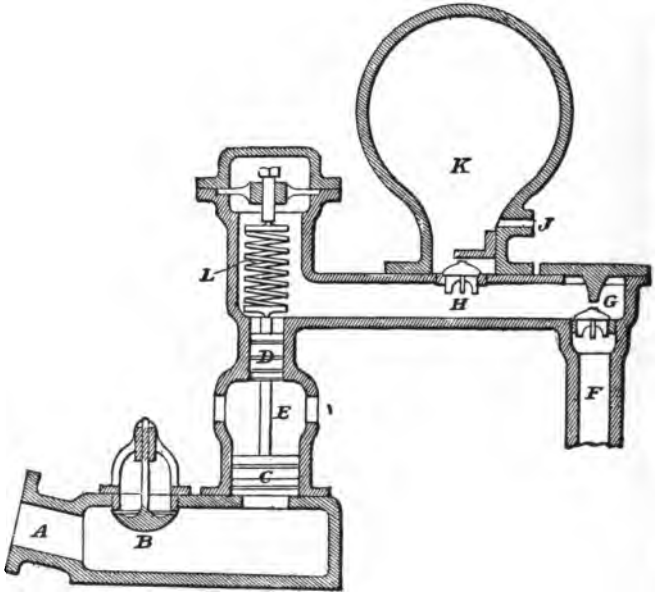

FIG. 182.

means of a thick india-rubber washer carried by the valve. The outflow of the water being stopped, its momentum forces up the piston D, connected to the pump-plunger G. The drive-pipe A is provided at the top with a back pressure valve, which closes at the same time as the pulse-valve B, so that the whole energy of the water is utilised, and its momentum not lost in part in forcing the water back into

the reservoir, but is all expended upon the piston D. This piston rises in the cylinder C, expelling the air through orifices at the top, at L and L, while the water contained in the pump-barrel M is expelled through the valve N into the air-vessel O. The force of the water having been spent,

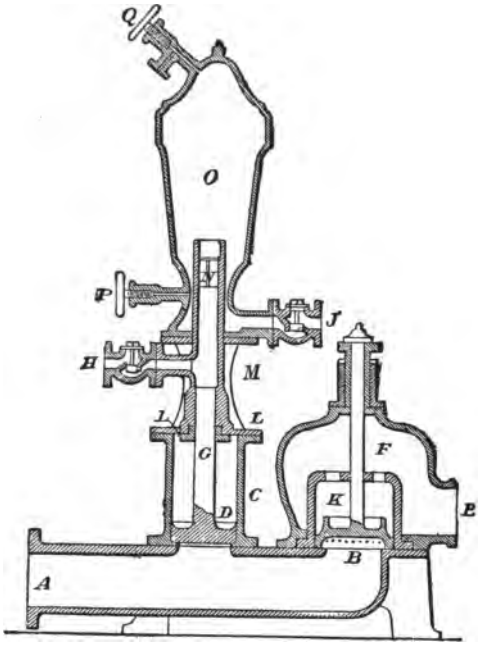

FIG. 183.

the pulse-valve B falls back on its lower seat, and the piston C sinks down on its seat under the action of the atmospheric pressure on its upper side. The plunger G at the same time draws water into the pump-barrel M, through the suction-pipe H, and suction-valve. The action is then repeated, the water being forced into the air-vessel, and out

through the delivery-valve and delivery-pipe J. The air is supplied to the air-vessel O by a snifting valve fitted to the suction-pipe. The air-vessel O can be emptied of water by the two valves P and Q, when the working of the ram is to be stopped.

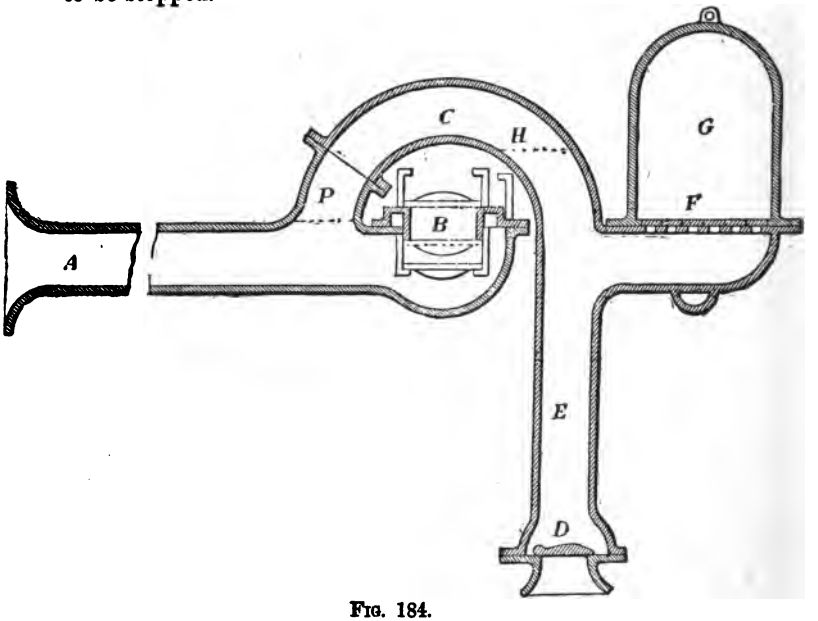

FIG. 184.

MONTGOLFIER'S HYDRAULIC PUMPING-RAM.

This hydraulic pumping-ram has neither diaphragms nor pistons or plungers, the pumping being effected by means of compressed air. Fig. 184 is a sectional elevation of this ram. As before, A is the drive-pipe; B, the pulse-valve; instead of the air-vessel and delivery-valve in the ordinary rams, there is a bend C in connection with a foot-

valve D, and suction-pipe E; F is a set of delivery-valves for clean water, and G the air-vessel.

Supposing the suction-pipe is charged with water to the level H, as shown in the illustration, at the moment the pulse-valve B closes, the water, rushing up the bent pipe C, compresses the air in it. The air forms a kind of piston, reacting on the surface of the water at H, and forces it through the delivery-valves F into the air-vessel G. The water in the drive-pipe A having expended its energy, recoils with very great violence, being assisted by the expansion of the air at C. This recoil produces a partial vacuum at P. The overflow through the pulse-valve B being closed, the pressure of the atmosphere on the surface of the water, whence the pure supply is drawn, forces a portion of it through the foot-valve D, into the suction-pipe E. At the same moment the water recommences to flow, and the action is repeated.

Hydraulic Syphon Pumping-Ram.

This type of pumping-ram, is, as will be seen from the illustration, Fig. 185, different from all the others. It consists of a small force-pump actuated by a diaphragm, by the intervention of links and levers. This hydraulic ram is seldom met with: it is only used in situations where an ordinary hydraulic ram cannot be fixed, for instance, in places likely to be flooded, or where it is awkward to fix a ram, and where the water will cover the pulse-valve to such a height that the weight of the water will stop its working.

A is the drive-pipe; B, the pulse-valve; C, the air-vessel; D, the delivery-valve; F, the overflow-pipe for the drive-pipe; G, a branch-pipe in communication with the drive-pipe A, to the end of which branch is bolted a diaphragm H; to the diaphragm is secured one end of the lever J, working on a fulcrum K, furnished with a balance-weight L; the other arm M, of the lever J, is coupled to the plunger N of a small force-pump, O being the suction-pipe,

and P the delivery-pipe. The pump and drive-pipe are placed in the tank R.

We will now follow the action of this apparatus. Supposing the trunk and body of the ram, also the drive-pipe A, to be full of water, the latter being filled by means of the screwed plug S, and the ram in action. The pulse-valve B closes, and water is injected up the pipe through the delivery-valve D, and up the delivery-pipe E, as in an ordinary hydraulic ram; but by this method of working there is a great loss of the useful effect of the water, because the momentum of the water in the drive-pipe A, by reason of the pulse-valve B intervening, has no effect upon the delivery-pipe below the delivery-valve D, but it is worked simply by the weight of water within the short leg of the syphon. Now, to get over this difficulty, and to take advantage of the weight of water in the long leg of the syphon, the force pump is added. Supposing the water in the trunk is put into rapid mo io1,

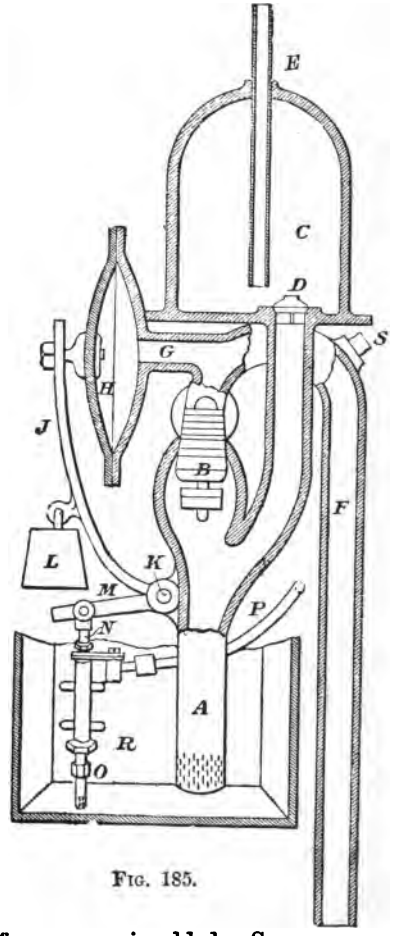

FIG. 185.

and the pulse-valve B suddenly arrest the column of water, the weight in the trunk will tend to create a partial vacuum and in proportion to the velocity and weight of the water, so will the diaphragm H move inwards, work the lever J, and raise the pump-plunger N. When the effect of the momentum of the water within the trunk is passed, the balance weight L, on the lever J, will bring back the lever, and with it the diaphragm H, and so on alternately. It will be plain that by this method water may be raised to any height required. Instead of the diaphragm a piston or plunger may be employed.

CHAPTER XXVI.

HYDRAULIC RAM ENGINES.

THIS is a class of hydraulic machines which is a kind of combination of a hydraulic ram and a hydraulic engine. Mr. H. D. Pearsall, in *Engineering*, dated April 9, 1886, states:—"Indeed, this violent action has come to be regarded by many people as essential to the working of such machines (hydraulic rams), and it is commonly supposed that there must necessarily be something of the nature of a blow. Hence the name of 'ram.'" In the machines described in this division there are no shocks, hence they cannot be called hydraulic rams, the pulse-valve being actuated by a supplementary engine driven by water, steam, or compressed air.

SOMMEILLIER'S HYDRAULIC RAM ENGINE FOR COMPRESSING AIR.

Fig. 186 is a theoretical diagram of this type, which was working in the Mont Cenis Tunnel, compressing air for the tunnelling machinery. A is the drive-pipe connected to a reservoir; B, the air-compressing chamber; C, the pipe for conducting the compressed air to the air-receiver D. E is the admission valve, and F the pulse-valve; G, the compressed air delivery-valve, and H are the air-inlet valves; J are acceleration-valves; L, the motive lever for the feeding or admission-valve; M, the motive lever for the pulse-valve; N, is the discharge-water receiver; O, the overflow; P, the regulating plane. The admission-valve E, is placed in an

enlarged portion of the pipe A. It consists of a zinc cylinder moving in a larger cylinder perforated with holes,

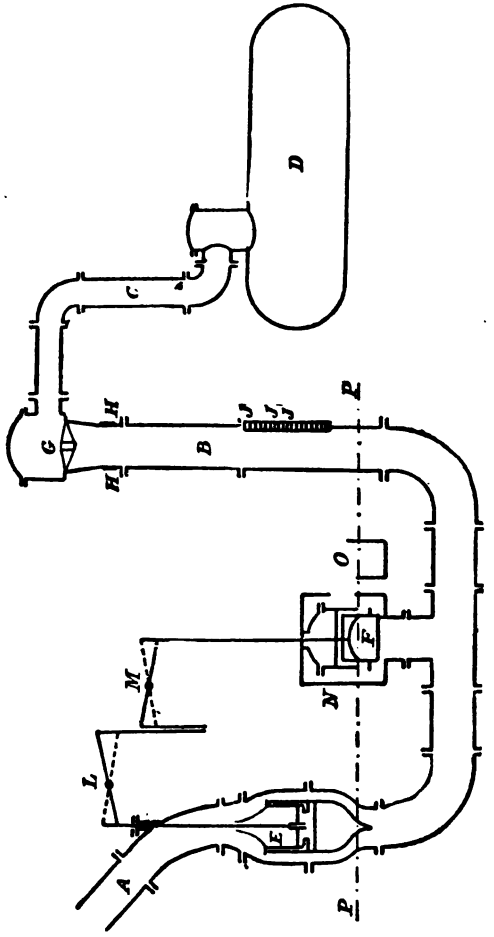

FIG. 186.

which the valve alternately opens and shuts. Its upper surface is made of a conical form, in order to allow the water

to flow through the holes without being thrown into eddies when the valve is opened. The valve rests on a seat surmounted by guides, and is fixed firmly to the sides of the pipe. This seat is provided with india-rubber buffers for deadening the shock of the valve cylinder should it happen to fall suddenly. The conical cap is fixed to the seat, and not to the cylinder of the valve, and acts only when the apertures are opened. The valve-cylinder and seat are constantly immersed in water, so that the apparatus can be closed without the valve being subjected to the pressure of the water. The valve E strikes with great force against its seat, since it is necessary it should open quickly in order that the full force of the water may be applied at once. Although the weight of the valve-cylinder is considerable, compressed air is made to act on the upper surface of a piston, connected with the valve-cylinder, and so to hasten the descent of the cylinder. The valve F acts on a similar principle. The valve G is a disc of copper resting in a hollow; it moves from below upwards, and its motion is guided by a cylindrical groove pierced with holes. The valve is placed at such a height that it just touches the surface of the water when the force of the column of water is expended. The valve H, for admitting the atmospheric air, is a simple valve opening inwards; it is therefore placed at H; but as the valve F opens after the air is compressed, a partial vacuum is formed in the upper part of the pipe, which retards the flow of the water until the upper surface of the liquid has reached the point H. A clack-valve has therefore been placed at the upper part of this pipe, immediately below the valve G. The motive levers, L and M, are actuated by an engine, which in this case was worked by compressed air.

The action of this apparatus is as follows:—In the illustration the valve E is supposed to be open, and the compressing column acts uninterruptedl yon the air contained in the chamber B. Now let us suppose that the valve E should be raised, and close the annular space, all that part

of the compressing column which is placed above the valve E will be suspended, and will cease to act on the part below during the whole of the time that the valve E closes the annular space and cuts off the column above, and hence the object of the valve E is to admit and to suspend the action of the compressing column. Supposing we now raise the valve F, all parts of the compressing column, as well as the chamber B, will be put into communication with the atmospheric air, hence the water in N and B will fall to the level P, determined by the level of the water in the discharge channel N and receiver O. The air-chamber B will then be filled with atmospheric air down to the level P, and the portions of the compressing column contained under the valve E and in the annular portion will not be submitted to any pressure except the ordinary atmospheric pressure.

The valve E remains closed during the time that the valve F makes its double-stroke, and *vice versa*. If the valves E and F were open at the same time it is evident that the water would escape with great force through the openings at O.

The valve G on the top of the compressing column B, when rising, allows the air, after it has been compressed, to escape from the column B into the air-receiver D, and closing again it prevents the air from returning. The valves H opening inwards admit the atmospheric air into the chamber B, during the time the water in the drive-pipe escapes through the pulse-valve F.

Let us suppose that the valves E and F are closed, and the level of the water to be at P in the chamber B; let the chamber B be full of atmospheric air, and the valve H be shut.

Now, allow the valve E to fall, the compressing column will immediately enter into motion; it will rise in B, and will compress the air contained in this chamber; the air in B will be compressed until it has acquired force enough to lift the valve G, and then the same compressed air will pass

into the receiver D, the water rising till it touches the valve G, where it has lost all its velocity; the valve G will then close by the static pressure of the compressing column, whereas from above it sustains the pressure of the air in the receiver D. At this moment all the compressing column up to the valve G is at rest. Let us then shut off, by lifting the valve E, all that portion of the compressing column which is above it, and prevent it from acting upon the portion below it; open the valve F and the water contained in the chamber B will be driven out into N and flow away into the channel O, the valves H will open and the atmospheric air will enter into B, and will drive the water down to P. When this level has been reached the whole system will again be at rest, and ready to commence another pulsation.

The use of the valves J is to alter the amount of compression; this is effected as follows:—The chamber B is filled entirely with atmospheric air from the level P to the valve G, but instead of making such arrangements as to make the compressing column compress the air from the level P, such a quantity of air is allowed to escape as would represent the volume by which it is wished to diminish the capacity of the chamber B, the whole effect of the compression being exerted on the remaining quantity of air. The small valves J, kept open by their own weight, are used for this purpose; but they can be closed entirely, and the compressor can be reduced to its normal state by closing them all; or any number of them can be closed and the remaining ones left open, hence the capacity of the chamber may be regulated according to requirements.

If we now suppose that the compressing column has sunk to the level P, and let it be ready for a pulsation; if all the clacks J are closed the pulsation would be normal, and it would take place as already described; but if these small valves are open the air raised by the compressing column will not be compressed, but will escape partially through

the clacks, in consequence of its greater density; it will close them successively, and when the last has been closed the ascending column will begin to compress the air above it, which is reduced in volume to an extent depending upon the position of the top valve J to the valve G. The motion of the compressing column will be entirely arrested, as in the normal pulsation, and a much smaller volume of compressed air will be obtained, but it will be compressed to a higher tension.

Pearsall's Hydraulic Ram Engines.

There are two types of Mr. Pearsall's hydraulic ram engine, one illustrated in Fig. 187, designed for forcing water; the other shown in Fig. 188, for compressing air.

We will first describe the water-forcing engine, of which Fig. 187 is a sectional elevation. A is the drive-pipe (of a certain length, depending on the height of fall and other circumstances of the particular case), conducting water from the source to the tail-race B; C is the pulse-valve or main-valve, opening and closing communication with the tail-race; D and D are the delivery-valves opening into the air-vessel E; F is the delivery-pipe. The pulse-valve is opened and shut by means of a small motor G, which is worked by the compressed air in the air-vessel E. H is an air-valve carrying a float J, the distance of which from H is adjustable by means of a screw K and a wrench.

The action is as follows:—The drive-pipe A being full of water, the pulse-valve is opened by the motor G, and water flows into the tail-race B, thus putting into motion all the water in the drive-pipe, the chamber M also emptying itself into the tail-race B, and being filled with air through the valve H. After the flow has continued for a certain time—say, for example, two seconds—the pulse-valve is closed by the motor. During the closing of the valve the flow of the water is not checked, as it can rise without

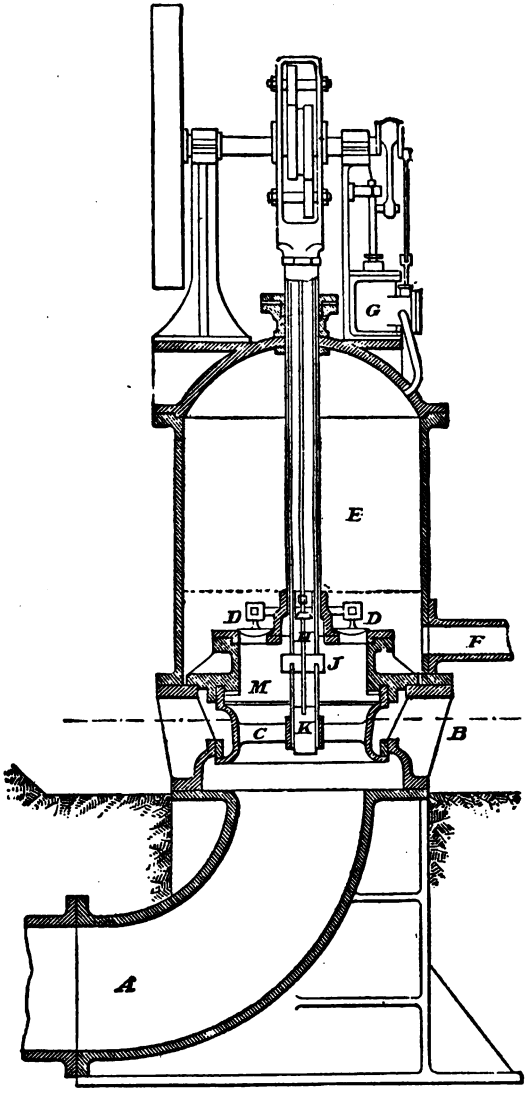

FIG. 187.

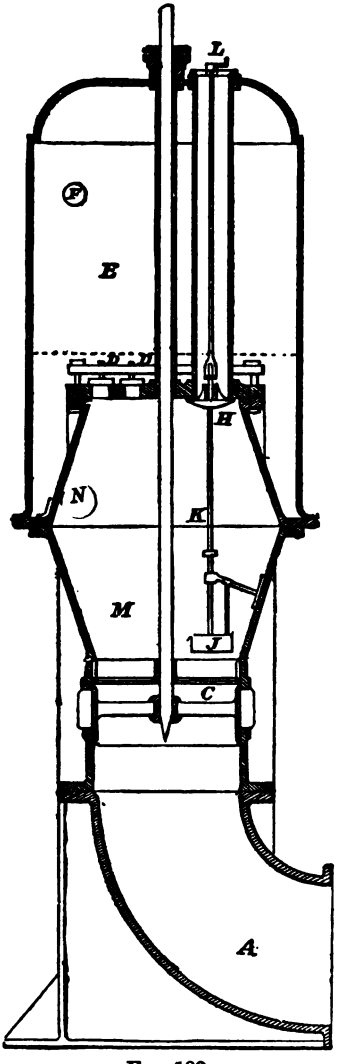

FIG. 188.

resistance in the chamber M, the air freely escaping by the valve H. The motion of the valve C need not therefore be rapid. When the pulse-valve is closed and the water has reached a certain height in the chamber it raises the float J and closes the air-valve H. If the float be adjusted so as to close the air-valve while there is still some air in the chamber, this air is then compressed (by the energy of the column of water) till its pressure equals that in the air-vessel E, when it and some of the water is forced into the air-vessel. Water thus continues to flow into the air-vessel E until the energy of the column of water in motion is exhausted by the resistance of the air-vessel, when the column of water comes to rest and the delivery-valve gently closes. The action of the motor is timed so that after this has taken place the pulse-valve C is again opened, and the cycle of operations is repeated. Of course water flows out of the air-vessel continuously under pressure through the delivery-pipe F.

It is not necessary ordinarily to confine and compress more than a very small quantity of air in the chamber E. If the small quantity necessary to supply the motor be confined it will also be ample to provide all the cushioning that is desirable. In starting the machine, however, it is an advantage to adjust the float so as to force in a considerable quantity of air, so as to fill the air-vessel E with compressed air, and reduce the water-level to a height of a few inches only above the valves, at which height it can easily be kept, thus avoiding any mass of water above the valves, and utilising the full capacity of the air-vessel.

In the method of working described above, the water in the drive-pipe is evidently always in motion in one direction (the state of rest being momentary), and its velocity varies periodically from zero to a certain predetermined maximum; the mean velocity is therefore half of the maximum velocity.

Mr. Pearsall's hydraulic ram engine for compressing air is illustrated in sectional elevation, Fig. 188. As the parts are similarly lettered and the action is identical it will not be necessary to describe it in detail. The chief difference is in the size of the chamber, M, and that, of course, the delivery-pipe takes off above the water-line in the air-vessel E. The nicety of adjustment attainable in the closing of the air-valve is such that the water can be made to come to rest at the instant when it reaches the delivery-valve plate, and thus no energy is wasted in forcing water into the air-vessel, or in compressing air which is not forced in. The upper part of the chamber M is surrounded by water, and a valve N assists in producing a circulation of the water, which is thereby kept cold, and the compression is consequently nearly isothermal, and therefore effected at less cost of energy than in any dry compressor.

CHAPTER XXVII.

DETAILS OF HYDRAULIC RAMS.

Pulse-Valves.

The original hydraulic rams patented in England by M. Montgolfier, senior, were fitted with ball or leather clack, or flap pulse-valves. The younger Montgolfier used ball-valves for the same purpose. At the present time nearly all the makers have adopted a brass spindle-valve, or spill-valve.

We will now proceed to illustrate and describe a few different designs.

Fig. 189 is a sectional elevation, and Fig. 190 a plan, of the pulse-valve used by Messrs. Massey, of Newport, Shropshire, for their hydraulic ram. A is a casting, secured to the body of the ram by means of four studs B. C is the gun-metal valve-seat, driven tight into the casting A; D is the valve, provided with a spindle E, which latter is furnished with a collar secured by a pin; F is a sleeve, working in the centre boss of the casting A, and prevented from turning round by a key G. H is a gun-metal nut, screwed to fit the outside of the sleeve F, for regulating the amount of rise and fall of the valve D, to the greatest nicety.

A pulse-valve frequently used, but not so readily adjusted, is shown in half sectional elevation, Fig. 191; part sectional end view, Fig. 192; and part sectional plan, Fig. 193. This valve has been adopted by several makers. A is a gun-metal casting secured to the top of the ram by

means of two studs; B the valve, cast in one with the spindle C; D are holes for the escape of the water through

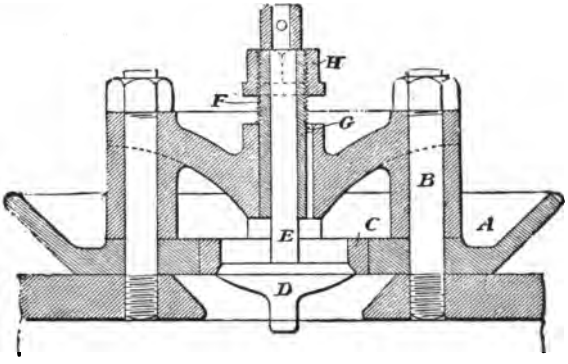

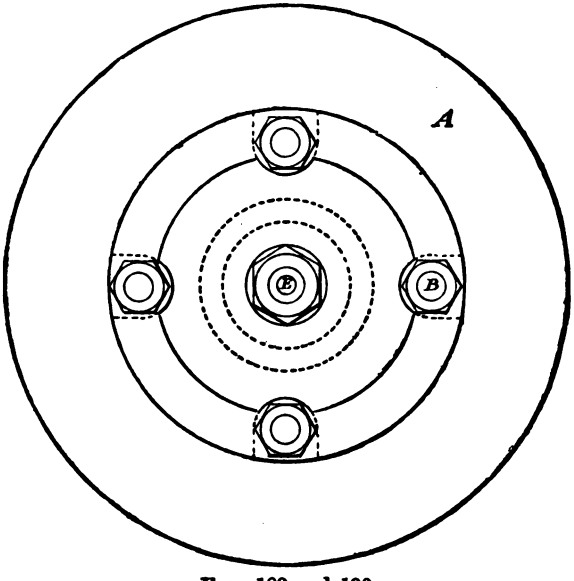

FIGS. 189 and 190.

the openings E; the seat or beat for the valve is formed at F, the bottom part of the casting A being cylindrical. The

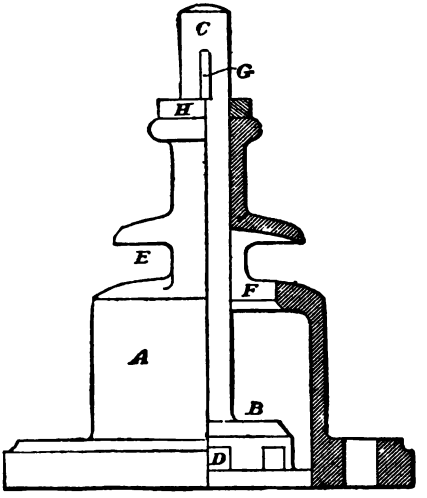

FIG. 191.

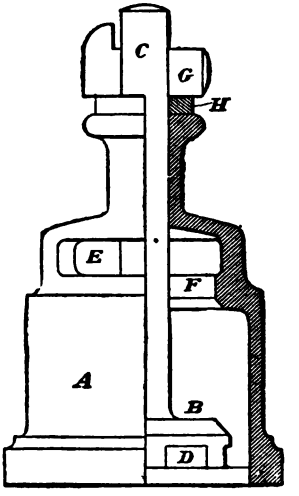

FIG. 192.

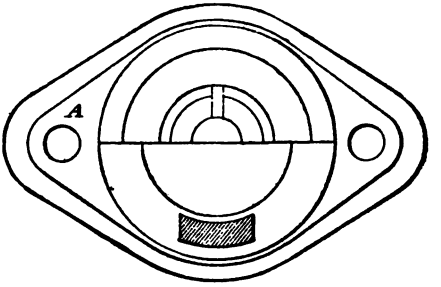

FIG. 193.

rise and fall of the valve is determined by the cottar G and washer H, the latter being made of different thicknesses to suit the required lift of the valve.

Mr. Hett uses two types of pulse-valves; one is illustrated in sectional elevation, Fig. 194. It appears to be a combination of the two valves already described and illustrated, or those valves have emanated from Mr. Hett's design. A is a gun-metal casing, furnished with slots B for the escape of the water, and a boss E, on the top, which is screwed on the outside; C is the valve, cast in one with the spindle D, this spindle working in the boss E; on the top of the spindle is fitted a nut G and washer F. H is a nut screwed on the boss E, for adjusting the lift of the valve; this nut is prevented from working loose by the check-nut J. Between the washer F and nut H is introduced a leather or india-rubber washer to prevent knocking. The ribs K, on the under side of the valve, are put at an angle, so as to produce a partial rotary motion to the valve every time it rises or falls.

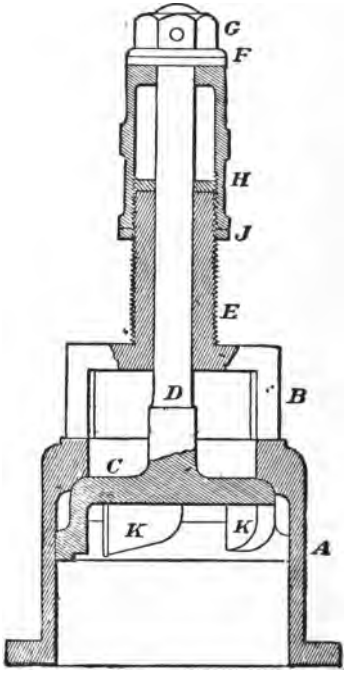

FIG. 194.

The second of Mr. Hett's pulse-valves is illustrated in Fig. 195. In this case the guide-body A is made of cast iron, secured to the body of the ram by studs made of Low Moor iron, fitted with brass nuts. The valve C is a plain disc formed of wrought iron with the spindle D, the latter being furnished with a nut F, at the top end. A gun-metal bush E is driven tight into a boss on the guide-

casting A, the bush being screwed on the outside to fit the adjusting nut H and check nut J. An india-rubber or leather washer is introduced between the nuts F and H. The joint between the guide-casting A and the body of the ram is made of india-rubber. It will be noticed that the last two pulse valves admit of the most perfect adjustment.

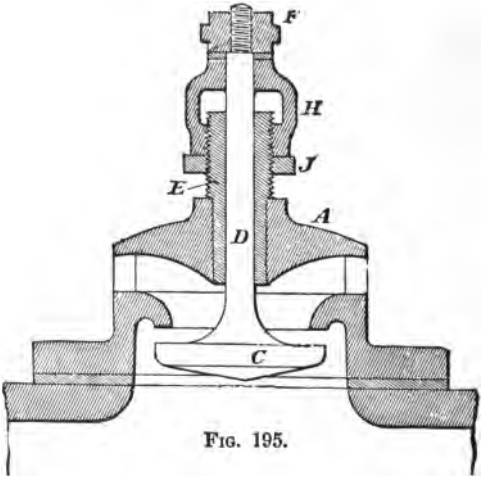

FIG. 195.

The pulse-valve adopted by M. Bolée, illustrated in Fig. 196, is of the bell type and consists of a cylinder or bell B, perforated by slots C, and on the under side covered by a disc A. The cylinder is provided in the centre with a boss bored out to fit the spindle D, on which it works up and down. Washers of any elastic material are placed between the casting boss and the boss of the valve at N, also underneath the spindle at O, to deaden the blow.

Mr. Fyfe used the pulse-valve illustrated in Fig. 197 for his hydraulic pumping ram. It consists of a dome-shaped casting B, furnished with a flange A, at the bottom for bolting it to the body of the ram, and a boss C, screwed

on the outside at the top to fit the adjusting nut D and check-nut E. The valve F consists of a wrought-iron disc forged in one with the spindle G. H is a disc of hydraulic butt leather, secured by a nut on the spindle G. The seat against which the valve beats consists of an india-rubber or leather ring tongued into the casting B.

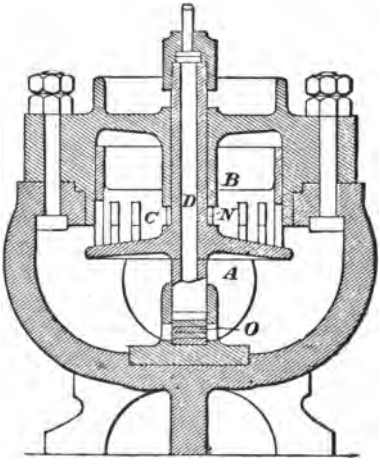

FIG. 196.

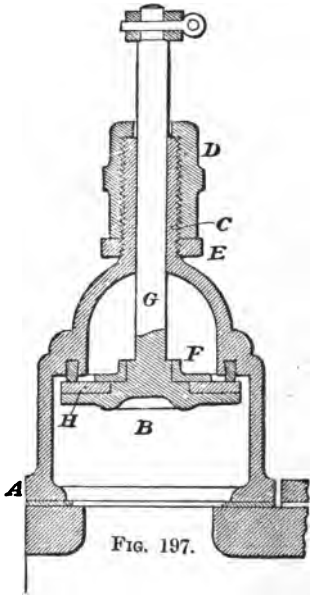

FIG. 197.

The pulse-valve used by Mr. Pearsall for his machine, illustrated in Fig. 187, is of the ordinary double-beat type, but the one used for the air-compressing machine is illustrated in sectional elevation, Fig. 188. It consists of a cylinder A furnished with a centre boss B joined to the ring or cylinder A by ribs. The spindle is secured to the boss by means of a nut top and bottom. The beat consists of a ring D secured to the body casting of the machine.

When the valve is moved up close to this ring, any pressure in the pipe forces the ring against the edge of the valve, and against the pipe, making a water-tight joint; but in opening the valve the ring has not to be carried past the orifice, thus

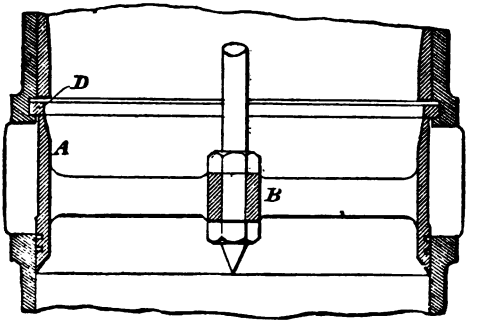

FIG. 198.

avoiding the wear of an ordinary piston-valve, and yet there is no bringing of the valve hard on to its seat, as in ordinary valves with fixed seatings or beats.

DELIVERY-VALVES.

M. Montgolfier used clack or flap-valves at first, but changed afterwards to ball-valves. These valves are still used by some makers, although the clack-valves are very sluggish in their action, and the ball-valves are objectionable because they give much less water-way than an ordinary mitre-valve of the same weight.

The delivery-valve which Mr. Hett uses is illustrated in Fig. 199. It consists of a round gun-metal disc A curved on the under side. On the top it is provided with a spindle, B; C is the gun-metal seat, secured to the body of the ram with studs D. The joint between the gun-metal seat and

body of the ram is made of the same india-rubber sheet as makes the joint between the air-vessel and body of the ram, as shown in the sectional elevation. In the top of the seating C is screwed a cap E, forming both the cover and

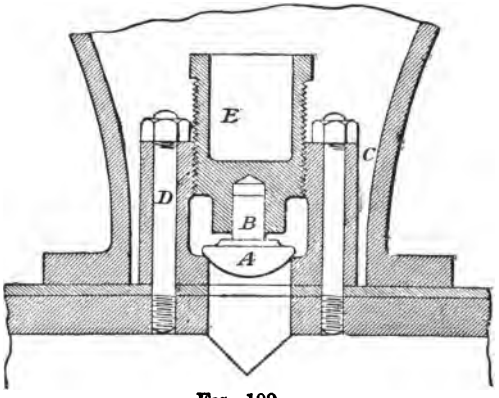

FIG. 199.

the stop for regulating the lift of the valve. This is an admirable arrangement; everything is accessible as soon as the air-vessel is removed.

Fig. 200 illustrates the delivery-valve employed by Messrs. Massey. A is an ordinary mitre-valve, recessed at the top, and a piece of india-rubber cord B is placed in the recess; a gun-metal cup C, also recessed, being put on the top of the india-rubber piece B. The lift of the valve is regulated by means of the set-screw D, screwed into a cross-bar E. The cross-bar is secured between the top of the valve-box and the air-vessel.

A delivery-valve which has been used by two or three makers is illustrated in section, Fig. 201. It consists of a gun-metal body A, provided with two or more grooves, according to the size of the delivery-pipe, the bottoms of which grooves are perforated; over the grooves are stretched

india-rubber rings B. When the pressure is produced from the inside of the body casting A, the water presses on the india-rubber rings, through the perforations, and expands

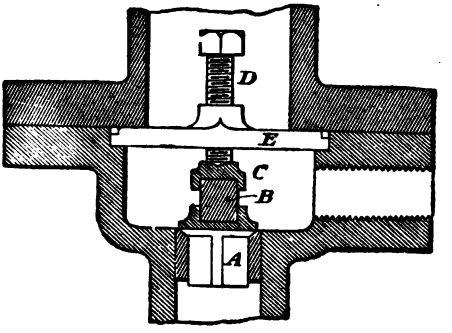

FIG. 00.

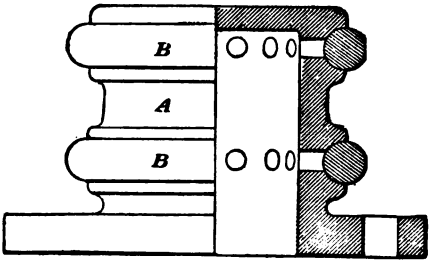

FIG. 201.

the rings, which allows the water to pass through into the air-vessel. The difficulty experienced with this valve is to obtain india-rubber rings of a perfectly cylindrical section.

BODY OF HYDRAULIC RAMS.

The shape and size of the body of hydraulic rams varies with every maker. Some place the delivery-valve nearest

the drive-pipe (Fig. 161, page 213); others the pulse-valve first, then the delivery-valve (Fig. 153, page 204).

Some engineers make the body of the ram rectangular, others circular.

Some again make the body with straight-sides; others swell the body at the place where the pulse-valve is fixed, as will be seen in Messrs. Massey's ram, plan Fig. 154 page 205, which M. Eytelwein considered the proper shape. The author's opinion is that the body of the ram should be circular, of the same diameter as the drive-pipe, because the less body of water the quicker the recoil is produced, and wherever enlargements occur, when water is flowing, an increase of friction is produced.

All necessary curves, as for instance at the end of the ram body, at G, Fig. 153, page 204, the radius should be as large as possible.

Snifting-Valves.

If a hydraulic ram of large dimensions is used to raise water to a great height it will be subject to an inconvenience that will soon destroy the beneficial effect of the air-vessel. For if air be subjected to great pressures in contact with water it, in time, becomes incorporated with or absorbed by the latter. This frequently occurs in hydraulic rams, for when used they are incessantly at work both day and night. To remedy this M. Montgolfier, jun., ingeniously adopted a very small valve, opening inwards, to the pipe beneath the air-vessel, and which was opened and shut by the action of the hydraulic ram.

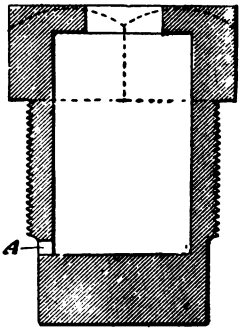

Fig. 202.

Some makers simply drill a small hole in a brass plug, screwed into the cast-iron body. This plug is illustrated

in Fig. 202. A is the hole, which is about $\frac{3}{32}$ of an inch in diameter.

A very good snifting-valve is illustrated in Fig. 203 and Fig. 204. It consists of a gun-metal casting A, screwed into the body of the ram; B is the ball-valve, beating alternately against the seats C and G, the seat C being turned into the plug D, screwed into the casting A; the air enters the hole E, through the slots F and F, when the ball is against the seat C, but when against the seat G the air is prevented from entering the ram.

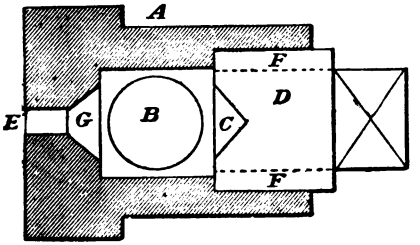

FIG. 203.

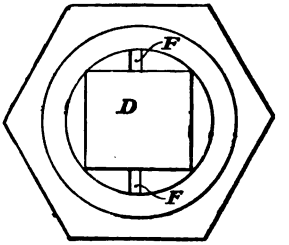

FIG. 204.

The Americans seldom use the snifting-valve, on which account the American hydraulic rams are seldom recommended for high lifts.

AIR-VESSELS.

The air-vessels are very important in hydraulic rams, and should, therefore, receive a great deal of attention. There are several kinds used. The ordinary simple cast-iron air-vessel is still probably the best, if the casting is perfectly sound and well covered on the inside with pitch, so as to make it perfectly air-tight.

A Mr. Anderson, of London, patented the idea of filling the air-vessel with cork, to absorb the shocks caused by the sudden arrest of the flow of the water.

In America air-balloons placed within the air-vessel were tried, but the balloons kept breaking and pieces came under the delivery-valve.

Spring air-vessels, such as Mr. Blake uses for his hydraulic rams, and other arrangements of springs have been tried, but have not come into very great use.

Mr. W. W. Grier recommends the air-vessel to be made of glass. The advantage of making them of glass is evident: *first*, the glass is not porous like cast iron; *second*, it possesses the advantage that the height of water in the air-vessel and its action at every pulsation of the valve can be clearly seen at any time, and an assurance given that there is sufficient air to form a proper cushion.

It is often the case that a hydraulic ram throws very little water, simply because the air-vessel is filled, or nearly filled, with water.

CHAPTER XXVIII.

RULES, FORMULAS, AND TABLES FOR HYDRAULIC RAMS.

THE best known investigations of the theory of the hydraulic ram are those by Venturoli, but the most complete body of practical information respecting them is that contained in a treatise on the hydraulic ram, published by Eytelwein about the year 1802, and stating the results of a very large series of experiments. This book is now out of print, but all the information, or rather all the useful information, was translated into French by M. Arthur Morin, and is included in his valuable book, 'Des machines et appareils destinés à l'élévation des Eaux.'

The *efficiency of a hydraulic ram* equals the quantity of water used in gallons multiplied by the head of the fall in feet, divided by the quantity of water delivered multiplied by the height to which the water is raised.

The percentage of *useful effect* decreases regularly as the proportion of lift to fall increases. This is shown by the following table calculated from D'Aubuisson's formula :—

TABLE VIII.

Proportion of lift to fall.	Duty.	Proportion of lift to fall.	Duty.	Proportion of lift to fall.	Duty.
4	·86	12	·45	20	·17
5	·79	13	·41	21	·14
6	·73	14	·37	22	·11
7	·68	15	·34	23	·08
8	·63	16	·30	24	·05
9	·58	17	·27	25	·02
10	·53	18	·23	26	·00
11	·49	19	·20		

Multiply the required quantity of water in gallons by the figure in the second column and allow $\frac{5}{6}$ of the result, the remainder will be the quantity of drive-water required.

The table, No. IX. (see next page), on the *percentage of the total amount of water taken from the reservoir*, under various working heads from 2 to 24 feet, and delivery at elevations above the ram from 15 to 100 feet, is copied from the 'American Engineer.'

Example.—10 feet fall and to deliver 60 feet high; the volume obtained from the source 30 gallons per minute. What amount of water will be delivered in gallons per minute?

In the table the coefficient given for 10 feet fall and 60 feet delivery is ·1020; then,

$$\cdot 1020 \times 30 \text{ gallons} = 3 \cdot 06 \text{ gallons per minute.}$$

Diameter of Drive-Pipe.

Eytelwein's formula for diameter of *parallel drive-pipe* is the square root of the quantity of water used in gallons multiplied by 0·058.

The diameter of a *taper drive-pipe* will be found in the following manner:—The small diameter of the pipe, that is the end nearest the ram, should be of the same diameter as a pipe which, being 3 feet long and having a head of 6 inches, will pass three times the quantity of water that is available as supply, because the water in the drive-pipe only flows towards the ram about one-third of the time. The large end should be of such diameter that the quantity of water delivered by the small diameter, 3 feet long under a pressure of the given head, and the diameter of a pipe 3 feet long which will deliver that quantity with a head of 6 inches, is the required diameter of the large end of the taper drive-pipe.

TABLE IX.

Working head.	15	18	21	24	27	30	35	40	45	50	60	70	80	90	100
feet	feet	feet	feet	feet	feet	feet	feet	feet	feet	feet	feet	feet	feet	feet	feet
2	·0724	·0533	·0420	·0307	·0235	·0181	·0112	·0063	·0027	..	..	..	..	..	..
3	·1327	·1020	·0807	·0651	·0530	·0441	·0326	·0243	·0181	·0132	·0063	·0017	..	..	..
4	·1960	·1535	·1234	·1020	·0854	·0724	·0560	·0441	·0348	·0281	·0180	·0112	·0063	·0027	..
5	·2614	·2068	·1686	·1404	·1189	·1020	·0807	·0652	·0533	·0441	·0307	·0217	·0150	·0099	·0063
6	·3282	·2614	·2146	·1800	·1535	·1327	·1063	·0870	·0724	·0608	·0441	·0325	·0243	·0180	·0132
7	·3960	·3170	·2614	·2203	·1885	·1640	·1327	·1096	·0920	·0782	·0580	·0441	·0340	·0264	·0205
8	·4647	·3733	·3090	·2614	·2248	·1960	·1595	·1327	·1121	·0960	·0724	·0560	·0441	·0351	·0281
9	·5341	·4303	·3572	·3030	·2614	·2285	·1868	·1561	·1327	·1142	·0870	·0682	·0545	·0441	·0360
10	·6040	·4877	·4058	·3450	·2984	·2614	·2145	·1800	·1535	·1327	·1020	·0807	·0651	·0533	·0441
11	·6745	·5459	·4549	·3874	·3357	·2947	·2425	·2041	·1746	·1514	·1172	·0934	·0760	·0627	·0524
12	·7453	·6040	·5043	·4302	·3733	·3282	·2708	·2285	·1960	·1704	·1327	·1063	·0870	·0723	·0608
13	·8166	·6627	·5540	·4732	·4112	·3620	·2994	·2532	·2177	·1896	·1483	·1194	·0983	·0821	·0694
14	·8881	·7217	·6040	·5166	·4494	·3960	·3282	·2780	·2395	·2090	·1640	·1327	·1096	·0920	·0782
15	·9600	·7809	·6543	·5601	·4877	·4303	·3572	·3030	·2614	·2285	·1800	·1460	·1211	·1020	·0870
16	..	·8404	·7048	·6040	·5263	·4647	·3863	·3282	·2835	·2482	·1960	·1595	·1327	·1121	·0960
17	..	·9001	·7555	·6480	·5650	·4993	·4157	·3535	·3058	·2680	·2123	·1731	·1444	·1223	·1050
18	..	·9600	·8064	·6921	·6040	·5341	·4451	·3790	·3282	·2880	·2286	·1868	·1561	·1327	·1142
19	..	..	·8574	·7364	·6430	·5690	·4746	·4046	·3507	·3081	·2449	·2006	·1680	·1430	·1262
20	..	..	·9086	·7808	·6823	·6040	·5042	·4303	·3733	·3282	·2614	·2145	·1800	·1535	·1327
21	..	..	·9600	·8254	·7217	·6392	·5340	·4561	·3960	·3486	·2780	·2286	·1920	·1640	·1420
22	..	..	..	·8701	·7612	·6745	·5640	·4820	·4188	·3688	·2947	·2425	·2041	·1746	·1514
23	..	..	..	·9150	·8007	·7098	·5940	·5080	·4417	·3892	·3114	·2567	·2163	·1853	·1609
24	..	..	..	·9600	·8404	·7453	·6241	·5341	·4657	·4097	·3282	·2708	·2185	·1960	·1704

Length of Drive-Pipe.

When the perpendicular fall from the source to the pulse-valve is but a few feet, and the water is required to be raised to a considerable height through the delivery-pipe, the length of the drive-pipe must be increased, and to such an extent that the water in it is not forced back into the spring when the pulse-valve closes, which will always be the case if the drive-pipe is not of sufficient length.

M. Arthur Morin gives the following *rule* for the *length of parallel drive-pipe*, viz. length of the delivery-pipe multiplied by 0·628 multiplied by the height of lift divided by the fall; but some English makers, in practice, use a length of from 36 to 100 feet.

The American practice is to make the *length of the parallel drive-pipe*, as a rule, five times the height of the fall, but it is sometimes made as much as ten times the height of fall.

The Length of Taper Drive-Pipe.

9	feet	for each	foot	of fall	from 2	feet of fall or under.
8	„	„	„	„ 3	„	„
7	„	„	„	„ 4	„	„
6	„	„	„	„ 5	„	and upwards.

Inclination of the Drive-Pipe.

The inclination of the drive-pipe varies from 1 in 18 for small rams to 1 in 4 for high falls.

Diameter of Delivery-Pipe or Rising Main.

The diameter of the delivery-pipe should be such that it will not add more pressure on the ram than is due to a head of 2 to 3 feet; usually it is made $\frac{1}{4}$ to $\frac{1}{3}$ of the area of the drive-pipe.

Pipes.

The pipes most suitable are galvanised iron pipes, but whatever the material they should be as smooth as possible internally, so as to create little friction; in fact strong solid pressed lead pipes are very good for small hydraulic rams.

Cast-iron pipes are usually made with sockets instead of flanges, the sockets to be put upwards towards the source.

If it is necessary to have a dip in the delivery-pipe, an air-tap should be placed on the highest point before reaching the dip. This tap must be opened after the pipes have at any time been empty.

If any bends in the pipes are indispensable they should be made very easy, having as large radius as possible, so as to reduce the friction to a minimum.

Pulse-Valves.

The diameter of the pulse-valve varies considerably with different makers. Some makers use a pulse-valve four times the area of the smallest diameter of the taper drive-pipe. Mr. Hett uses a diameter equal to the diameter of the drive-pipe, and states that his experiments do not show any increased duty arising from the use of large valves. This latter is verified by Eytelwein's experiments, which fix the latter area as the least size which can be employed without impairing the efficiency.

Double pulse-valves. Two pulse-valves are sometimes used by a few makers when the lift is excessive compared with the fall; by their use a greater area is presented to the escape of the water, and thus a greater velocity is secured in the drive-pipe. This increase in momentum enables a portion of the water in the drive-pipe to pass the delivery when loaded with a greater head. However, the same result is obtained by a balanced pulse-valve of large diameter.

Beats.

The number of beats or strokes of the pulse-valve varies with the fall and the weight of the pulse-valve, if not balanced, but it can be varied from 20 to about 200 beats per minute to suit the supply of water; generally the best effect will be secured when the valve is beating at the greatest speed at which it will work with certainty. Hydraulic rams with a secondary air-vessel, that is an air-vessel in direct communication with the drive-pipe, generally run faster than without it; but it is rather doubtful whether any better results are obtained, while the life of the valve is materially shortened.

Air-Vessels.

The air-vessels are usually made too small; they ought to be as large as practically convenient, no definite rule being given. Mr. Molesworth, in his pocket-book, states that the contents of the air-vessel should be equal to the contents of the rising main.

General Rules for Fixing Hydraulic Rams.

Care should be taken in fixing hydraulic rams in cold climates, so that the ram and pipes are placed 2 feet 6 inches to 3 feet under the ground, to protect them from frost.

A strainer should always be secured in the front or highest opening in the drive-pipe, to prevent chips, rubbish, dead-leaves, &c., from entering the ram.

A hinged valve on the top of the drive-pipe, and a sluice-valve or cock near the ram body, by which means the ram can be stopped or started, should always be provided.

A race should be cut to convey the waste water away.

It is far better to have two smaller hydraulic rams than one large one, as in case of repairs to one the other can be kept at work and a partial supply maintained.

Hydraulic rams should be made very strong, simple in construction (as they receive very little attention and mostly are required to work day and night), well fitted, and all parts made to gauges and templets.

The following directions are given by Mr. Hett:—The ram should be securely bolted down to a stone about 9 inches thick, and of sufficient surface to project, in every direction, from 3 to 6 inches beyond the base of the ram. The stone itself should be fixed so that its upper surface corresponds with the average low-water level in the tail-race. The ram must be bedded down perfectly level, and securely attached to the foundation stone. A brick or stone house may be provided as a protection from the weather; a convenient size for the same is 5 feet square, more or less according to the size of the ram. If the level of the surface of the land is much above that at which the ram is to be placed, a circular pit not less than 5 feet diameter should be sunk for it. This pit should be steined with brickwork like a well, gathered in at the top and closed with a trap-door. The strainer must be fixed at such a height that the water above the dam can never sink below its top. It may be placed in an inclined position, except when it is considerably below the ground-line, in which case it should be level in order that the starting handle may be plumb.

Management of the Hydraulic Ram.

Starting.—To start the ram open the head-valve by turning the key from right to left. Avoid putting undue strain on the valve by working it when it has moved the proper distance. Press down the pulse-valve so as to let water discharge, and then allow it to rise, and continue working it in this way for a few strokes by hand until it will beat by itself. Sometimes at starting the valve will beat very rapidly for a few strokes and then stop; this action shows the pressure of air in the drive-pipe. When

this occurs press the valve down a few moments, then lift it and hold it up; by this means you will probably dislodge the air either at once or after a few trials. If, however, you are unsuccessful, close the head-valve and take off the pulse-valve, then let the full force of the water flow through the drive-pipe. On replacing the pulse-valve you will find it work properly.

Stopping.—When it is required to stop the ram for any purpose it is sufficient to lift, and thus close, the pulse-valve. The head-valve need only be used for stopping the water when the ram requires examination.

To change the speed, increase the lift of the pulse-valve, by means of the adjusting nuts, for a slower stroke, and decrease it for a quicker one. On a slow beat the ram will use and lift more water than on a faster one.

If the snifting-valve is covered with the tail-water, or if, from any other cause, inoperative, the air-vessel will become filled with water; the ram will then cease delivering, although the escape-valve continues beating and everything is apparently working properly. To remedy this shut the head-valve, remove and empty the air-vessel, replace it, and the ram will again be found to deliver properly. With a slow lift the absence of air in the air-vessel is sometimes shown by the water being delivered at the cistern in a succession of spurts, accompanied by a concussion in the pipes. When this is heard the air-vessel should at once be examined.

CHAPTER XXIX.

MEASURING WATER IN A STREAM AND OVER A WEIR.

THE units used in England for measuring water are:—

Cubic feet for water-power.

Gallons for pumping water-supply or sewage.

Tons for marine purposes, such as bilge-water or ballast.

Miner's inch for the gold field or mines.

The unit used in France is the litre.

Before a water or hydraulic motor of any description can be fixed the quantity of water at command must first be ascertained. This can be done in different ways, the first approximately; by the other methods the quantity can be obtained more accurately.

By the first method a point of the river or stream, where the width is uniform or nearly so, must be selected; when that has been found throw into the middle of the stream a bottle partly filled with water, or any other body of sufficient weight so that it is nearly totally immersed in the water; then take note of the distance this object travels in one minute. This process should be repeated several times, and the average speed taken as the speed of the flow of the water in the stream. When the speed of the current has been ascertained we must find the mean sectional area of the stream within the measured distance, and multiply the average area, in square feet, by the distance in feet per minute. From the product deduct one-fifth for the frictional resistance at the sides and the bottom of the stream, the result being the available quantity of water in cubic-feet per minute.

If we require to measure small quantities of water from a small stream or spring, we may place a tank, that can easily be emptied, and will contain enough water to hold the flow for about one-half to one minute; note the time it takes to fill it; calculate the contents in cubic feet, and divide it by the time in seconds or minutes, as the case may be.

The more correct method of measuring large quantities of water consists in gauging the water flowing over a weir or tumbling bay, one of which is illustrated in Fig. 205.

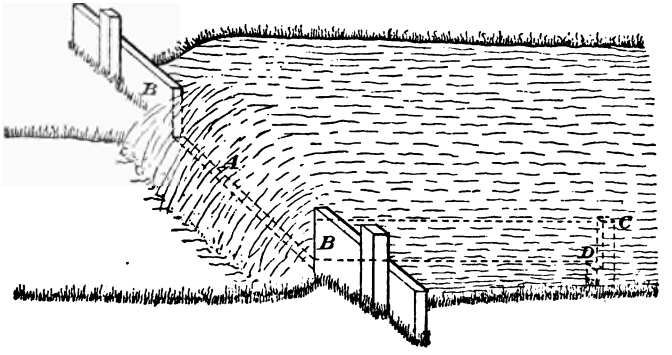

FIG. 205.

Where it is possible to use a single board, select one that is long enough to reach across the stream, resting in the bank at each end; cut a notch in its upper edge, over which the water is allowed to flow during the operation of gauging. This notch should be rectangular and of sufficient depth to pass all the water to be measured, and not over two-thirds of the width of the stream in length. When the quantity of water to be measured is small the notch in the weir should be in the shape of a V, the point of which should be at right angles, as shown in Fig. 206. The bottom of the notch A in the board B should be bevelled on the down side of the

stream, so that the flat part is only one-sixteenth of an inch in contact with the water. The ends of the notch should also be bevelled on the same side, and within one-eighth of an inch of the upper side of the board, leaving the edge almost sharp. A stake C should be fixed up-stream, a yard or two from the notch, and a mark or cut D should be cut on it; this stake C should be driven down into the bottom of the stream to such a depth that the mark D becomes in a perpendicular line with the bottom of the notch A in the board B, care being taken that the height of the stake C is not less than the vertical depth of the notch A. A rule divided into inches completes the necessary apparatus for gauging.

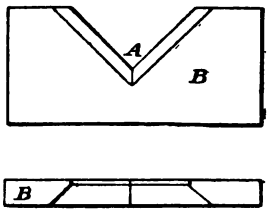

FIG. 206.

The method in which the gauging is performed is as follows :—Measure with the rule the exact distance from the mark D to the surface of the water on the stake C, multiply that distance, in inches, by the multiplier given in column 2, Table X., and the result multiplied by the width of the weir in inches; the product gives the number of cubic feet discharged over the weir per minute, when the notch in the weir is rectangular.

Example:—If we require the number of cubic feet delivered over a weir the notch of which is 48 inches wide, the height of water measured from the mark D, on the stake C, to the level of the water, $2\frac{1}{2}$ inches, we must look on Table X.; on that we find, opposite $2\frac{1}{2}$ inches, 1·59 cubic feet per minute for one inch width of weir, therefore,

$1 \cdot 59 \times 48 = 76 \cdot 32$ cubic feet of water flowing over the weir in one minute.

If a V notch is used proceed exactly as with the rectangular notch, except that the quantity of water in cubic feet per minute must be taken from Table XI.

TABLE X.—QUANTITY OF WATER IN CUBIC FEET PER MINUTE DELIVERED FOR EACH 1-INCH OF WIDTH OF RECTANGULAR WEIR.

Inches depth on weir.	Fraction of an inch.							
	0	$\frac{1}{8}$	$\frac{1}{4}$	$\frac{3}{8}$	$\frac{1}{2}$	$\frac{5}{8}$	$\frac{3}{4}$	$\frac{7}{8}$
1	0·40	0·47	0·56	0·65	0·74	0·83	0·92	1·03
2	1·14	1·25	1·36	1·47	1·59	1·71	1·84	1·96
3	2·09	2·22	2·36	2·60	2·64	2·78	2·93	3·06
4	3·22	3·38	3·53	3·69	3·85	4·01	4 17	4·34
5	4·51	4·68	4·85	5·02	5·20	5·38	5·56	5·74
6	5·92	6·10	6·30	6·49	6·68	6·87	7·07	7·27
7	7·46	7·67	7·87	8·07	8·28	8·49	8·70	8·91
8	9·12	9·33	9·55	9·77	9·99	10·21	10·43	10·66
9	10·88	11·11	11·34	11·57	11·80	12·04	12·27	12·51
10	12·75	13·15	13·28	13·47	13·72	13·96	14·21	14·46
11	14·71	14·96	15·21	15·46	15·72	15·98	16·24	16·49
12	16·76	17·02	17·28	17·55	17·82	18·08	18·35	18·62
13	18·89	19·17	19·44	19·72	20·00	20·27	20·56	20·83
14	21·22	21·40	21·68	21·97	22·26	22·55	22·84	23·13
15	23·42	23·71	24·01	24·30	24·60	24·90	25·19	25·50
16	25·80	26·10	26·41	26·71	27·02	27·32	27·63	27·94
17	28·56	28·57	28·88	29·19	29·51	29·51	30·14	30·45
18	30·78	31·11	31·43	31·75	32·07	32·40	32·73	33·50

TABLE XI.—QUANTITY OF WATER IN GALLONS PER MINUTE DELIVERED OVER A V-NOTCH.

Head in inches.	Decimal part of an inch.									
	·0	·1	·2	·3	·4	·5	·6	·7	·8	·9
1	1·90	2·42	3·00	3·67	4·41	5·24	6·16	7·17	8·27	9·47
2	10·76	12 16	13·66	15·27	16·98	18·81	20·75	22·80	24·97	27·26
3	29·67	32·20	34·86	37·65	40·57	43·62	46·80	50·12	53·57	57·17
4	60·90	64·78	68·80	72·97	77 29	81·75	86·37	91·14	96·08	101·15

Another method used in ascertaining the quantity of water obtainable from a stream is by allowing it to escape through an aperture. This is a very convenient plan in places where there is already a sluice or penstock, with a rectangular opening in the place. This kind of gauging is performed in the following manner:—Raise the sluice or shuttle sufficiently to pass all the water that comes down the channel or stream; measure the exact length and depth of the opening, both in inches; multiply the length by the depth, which will give the area of the opening in square inches. Next carefully measure the depth from the surface of the water-level in the channel to the centre of the opening. The above gives what is called *inches of water* at such a head.

The Table XII. gives the spouting velocity and number of cubic feet of water discharged per minute per 1 inch area of opening. Multiply the tabular number by the area of opening, in square inches, the result being the number of cubic feet discharged through the given opening.

Example:—If we have a sluice opening of 30 inches width by 4 inches depth, with a head of 20 inches from surface of the water in the channel to the centre of the sluice opening, then,

$$30 \times 4 = 120 \text{ square inches area of opening.}$$

Opposite 20, in Table XII., is 2·75 cubic feet discharge per 1 inch area of opening; therefore,

$2 \cdot 75 \times 120 = 330$ cubic feet discharged through the opening per minute.

TABLE XII.—SPOUTING VELOCITY AND DISCHARGE OF WATER THROUGH RECTANGULAR OPENINGS.

Head of water in inches.	Velocity per second in inches and decimals.	Cubic feet discharged per minute. Area of opening, 1 inch.	Head of water in inches.	Velocity per second in inches and decimals.	Cubic feet discharged per minute. Area of opening, 1 inch.	Head of water in inches.	Velocity per second in inches and decimal.	Cubic feet discharged per minute. Area of opening, 1 inch.
1	17·64	0·61	15	68·33	2 37	29	95·00	3·35
2	24·95	1·06	16	70·57	2 45	30	96·63	3·41
3	30·55	1·16	17	72·74	2·53	31	98·22	3·46
4	35·28	1·22	18	74·85	2·60	32	99·80	3·52
5	39·45	1·37	19	76·90	2·67	33	101·34	3·57
6	43·21	1·50	20	78·90	2·75	34	102·87	3·63
7	46·68	1·62	21	80·84	2·87	35	104·37	3·67
8	49·60	1·73	22	82·75	2·93	36	105·85	3·72
9	52·92	1·84	23	84·61	3·00	37	107·31	3·77
10	55·79	1·94	24	86·43	3·06	38	108·75	3·82
11	58·51	2·03	25	88·21	3·12	39	110·17	3·87
12	61·11	2·12	26	89·96	3·18	40	111·58	3·93
13	63·61	2 21	27	91·67	3·24			
14	66·01	2·29	28	93·35	3·30			

INDEX.

PAGE

Action of hydraulic rams 197
Air-vessels 262, 269
Amos's hydraulic ram 227
Armstrong's water-pressure engine, oscillating 158
" " " rotary 180
" " " rotatory 152

Barker's mill 69
Bearing, top, for turbines 115
" bottom, for turbines 119
Beats for pulse-valve 269
Bélidor's reciprocating water-pressure engine 134
Björling's " " " 146
Blake's hydraulic ram 221
" " " and spring piston 228
" hydraulic pumping ram 236
Body of hydraulic rams 260
Bolée's hydraulic rams 216
Boulton and Watt's hydraulic rams 200
Bottom bearings for turbines 119
Breast water-wheels 29
Brotherhood's three-cylinder engine 174

Cadle's patent duplex Pelton water-wheel 51
Chinese water-wheels 2
Circumferential-flow turbines 97
Classification of hydraulic rams 196
" turbines 66
Column of water, pressure of 10
" " in motion 11
Cour's, de la, turbine 71

PAGE

DAVEY'S reciprocating water-pressure engine 144, 148
Davies's hydraulic ram 222
Delivery pipes, diameter of 265
„ valves 258
Details of hydraulic ram 252
„ turbines 115
Diameter of delivery-pipe 267
„ drive-pipe 265
Discharging edge of buckets 6
Double-acting water-pressure engine 135
Drive-pipe, diameter of parallel 265
„ „ taper 265
„ length of parallel 267
„ „ taper 267
Durozoi's hydraulic ram 212
„ „ pumping ram 236

EASTON and Amos hydraulic ram 227
Efficiency of hydraulic rams 264
Engine, hydraulic ram 243
„ „ „ Pearsall's 248
„ „ „ Sommeillier's 243
Engine, water-pressure, Armstrong's 152, 158, 180
„ „ Bélidor's 134
„ „ Björling's 146
„ „ Brotherhood's 174
„ „ Davey's 144, 148
„ „ double-acting 135
„ „ Escher, Wyss & Co.'s 182
„ „ Fairbairn's 133
„ „ Haag's 165
„ „ Hastie's 168
„ „ Jasper's 157
„ „ Johnstone's 151
„ „ Joy's 140
„ „ Junker's 130
„ „ Meyer's 155
„ „ oscillating 158
„ „ Pfetsh's 141
„ „ Pitman's 180
„ „ Ramsbottom's 167
„ „ reciprocating 129

PAGE

Engine, water-pressure, Rigg's 176
" " rotary 179
" " rotative 152
" " Schmid's 161
" " single-acting 129
" " three-cylinder 159
" " Trevithick's 132
" " Westgarth's 129
" " Wyss and Studer's 164
Escher, Wyss & Co.'s rotary water-pressure engine 182

FAIRBAIRN'S water-pressure engine 133
Fischer's hydraulic ram 205
Fixing hydraulic rams 269
Flow of water over a weir 10
Footsteps for turbines 119
Formulas and tables for hydraulic rams 264
Fourneyron's turbine 73
Fyfe's hydraulic ram 232

GENERAL remarks on hydraulic rams 269
" " water-wheels 54
" rules for fixing hydraulic rams 269
Girard's turbine 91
Governors for turbines 123
Grier's sentinel for hydraulic rams 224

HAAG'S oscillating water-pressure engine 165
Hanson's hydraulic ram 211
Head of contact 10
" discharge 10
" water 7
Height of fall 9
Hett's hydraulic ram 202
" " pumping ram 230
" Pelton water-wheel 47
" turbine governor 123
High-breast water-wheel 37
Horse-power 7, 10
Horse-power of water, Table II. 11
Hydraulic rams 196
" " action of 197

	PAGE
Hydraulic rams, classification of	196
„ „ details of	252
„ „ management of	272
„ „ with air-vessels in direct communication with the drive-pipe	199
„ „ without air-vessel in direct communication with the drive-pipe	227
„ „ Blake's	221
„ „ „ with spring piston	228
„ „ Bolée's	215
„ „ Boulton and Watt's	200
„ „ Davies's	222
„ „ „ self-stopping and starting	222
„ „ Durozoi's	212
„ „ Fischer's	205
„ „ Grier's sentinel	224
„ „ Hanson's	211
„ „ Hett's	201
„ „ injection	219
„ „ Keith's	211
„ „ Massey's	203
„ „ Montgolfier's	200
„ „ Morrow's	204
„ „ syphon	240
„ „ Whitehurst's	199
„ engines	128
„ „ Pearsall's	248
„ „ Sommeillier's	24
„ pumping rams	230
„ „ Blake's	236
„ „ Durozoi's	236
„ „ Fyfe's	232
„ „ Hett's	230
„ „ Keith's	234
„ „ Montgolfier's	239
„ „ with weighted diaphragm	232
Hydraulics relating to water-motors	6
Inclination of drive-pipe	267
Injection hydraulic ram	219
Introduction	1
Inward-flow turbines	81

PAGE

Jasper's water-pressure engine 157
Jonval's turbine 90
Johnstone's water-pressure engine 151
Joy's „ „ 140
Junker's „ „ 130

Keith's hydraulic ram 211
„ „ pumping ram 234

Length of drive-pipe 267
Losses occurring in water-motors 6
Lubrication of turbines 122

Management of hydraulic rams 270
Massey's hydraulic ram 204
Measuring water 272
Meyer's rotative water-pressure engine 155
Midstream water-wheels 17
Mixed-flow turbines 88
Montgolfier's hydraulic ram 200
„ „ pumping ram 239
Morrow's „ ram 204

Number of beats for pulse-valves 269

Ordinary undershot water-wheels 20
Oscillating water-pressure engine 158
„ „ Armstrong's 158
„ „ „ Haag's 165
„ „ „ Ramsbottom's 167
„ „ „ Schmid's 161
„ „ „ three-cylinder 159
„ „ „ Wyss and Studer's 164
Outward-flow turbines 69
Overshot water-wheels 37

Parallel drive-pipe 265
Parallel-flow turbines 90
Pearsall's hydraulic ram engine 248
Pelton water-wheels 40
Pfetsh's reciprocating water-pressure engine 141

	PAGE
Pipes	268
„ delivery	267
„ diameter of delivery	267
„ „ drive	265
„ drive	265
Pitman's rotary engine	180
Poncelet's water-wheels	24
Pressure column	10
Pressure of water	7
Pulse-valves	252
Pulse-valves, beats of	269
Pumping rams, hydraulic	230
„ „ Blake's	236
„ „ Durozoi's	236
„ „ Fyfe's	232
„ „ Hett's	230
„ „ Keith's	234
„ „ Montgolfier's	239
„ „ with weighted diaphragm	232
QUANTITY of water discharged	275
RECIPROCATING water-pressure engines	129
„ „ „ double-acting	135
„ „ „ single-acting	129
Redtenbacher's turbine	73
Regulation of turbines	104
„ „ circumferential-flow	113
„ „ inward-flow	105
„ „ mixed-flow	107
„ „ outward-flow	104
„ „ parallel-flow	107
Remarks on water-pressure engines	185
„ „ wheels	54
Rigg's four-cylinder engine	176
Rotary water-pressure engine	179
Rotative water-pressure engines	152
Rules for fixing hydraulic rams	269
Rules, formulas and tables for hydraulic rams	264
SCHMID'S oscillating water-pressure engine	161
Self-starting and stopping hydraulic ram	222

PAGE
Sentinel for hydraulic rams 224
Snifting-valve 261
Snow turbine governor 125
Sommeillier's hydraulic ram engine 243
Studer and Wyss's oscillating water-pressure engine 164
Syphon ram, hydraulic 240

TABLE I. Pressure of water at different heads in pounds per square inch 7
„ II. Horse-power of one cubic foot of water per minute .. 11
„ III. Square and cube roots of whole and half numbers .. 13
„ IV. Undershot water-wheels 23
„ V. Theoretical velocity of breast water-wheels 25
„ VI. Velocity of the periphery of breast-wheels 36
„ VII. Speed and power of Pelton water-wheels 50
„ VIII. Useful effect of hydraulic rams 264
„ IX. Percentage of water used in hydraulic rams 266
„ X. Water delivered over rectangular weirs 275
„ XI. Water delivered over a V-notch 275
„ XII. Spouting velocity and discharge of water through rectangular openings 277
Tables for hydraulic rams 266
Taper drive-pipe for hydraulic rams 265
Theoretical horse-power 10
Three-cylinder oscillating water-pressure engine 159
Thomson's turbine 83
Top bearings for turbines 115
Trevithick's water-pressure engine 132
Turbines 65
„ Barker's mill 69
„ circumferential-flow 97
„ classification of 66
„ de la Cour's 71
„ Fourneyron's 73
„ Girard's 91
„ inward-flow 81
„ Jonval's 90
„ mixed-flow 88
„ outward-flow 69
„ parallel-flow 90
„ Redtenbacher's 73

	PAGE
Turbines, Thomson's	83
„ Whitelaw's	72
„ Zuppinger's	99
„ details	115
„ „ of bottom bearing	119
„ „ of foot-step	119
„ „ of top bearing	115
„ Governors	123
„ „ Hett's	123
„ „ Snow	125
„ lubrication of	122
Turbine regulation	104
„ „ of circumferential-flow	113
„ „ of inward-flow	105
„ „ of mixed-flow	107
„ „ of outward-flow	104
„ „ of parallel-flow	107
UNDERSHOT water-wheels	17
„ „ ordinary	20
Useful effect of hydraulic rams	264
VALVES, delivery	258
„ pulse	252
„ „ beats of	269
„ snifting	261
Velocity of discharge of water	9
Vessels, air	262, 269
Vortex turbines	83
WATER-PRESSURE engines	128
„ „ Armstrong's	152, 158
„ „ Bélidor's	134
„ „ Björling's	146
„ „ Brotherhood's	174
„ „ Davey's	145, 148
„ „ double-acting	135
„ „ Fairbairn's	133
„ „ general remarks on	185
„ „ Haag's	165
„ „ Hastie's	168

	PAGE
Water-pressure engines, Jasper's	157
" " Joy's	140
" " Johnstone's	151
" " Junker's	130
" " Meyer's	155
" " oscillating	158
" " Pfetsh's	141
" " Ramsbottom's	167
" " Rigg's four-cylinder	176
" " rotary	179
" " rotative	152
" " Schmid's	161
" " single-acting	129
" " three-cylinder	159
" " Trevithick's	132
" " Westgarth's	129
" " Wyss and Studer's	164
Water-wheels	17
" breast	29
" high-breast	37
" overshot and high-breast	37
" Pelton	40
" Poncelet	24
" undershot	17
Watt's hydraulic ram	200
Wetted surface of water-motors	6
Whitehurst's hydraulic ram	199
Whitelaw's turbine	72
ZUPPINGER's turbine	99

LONDON: PRINTED BY WILLIAM CLOWES AND SONS, LIMITED,
DUKE STREET, STAMFORD STREET, S.E., AND GREAT WINDMILL STREET, W.

89090524778

b89090524778a